higher education & training

Department:
Higher Education and Training
REPUBLIC OF SOUTH AFRICA

MARKING GUIDELINE

NATIONAL CERTIFICATE

PLATING AND STRUCTURAL STEEL DRAWING N2

3 AUGUST 2018

This marking guideline consists of 7 pages.

Copyright reserved

Downloaded from www.mycourses.co.za

QUESTION 1

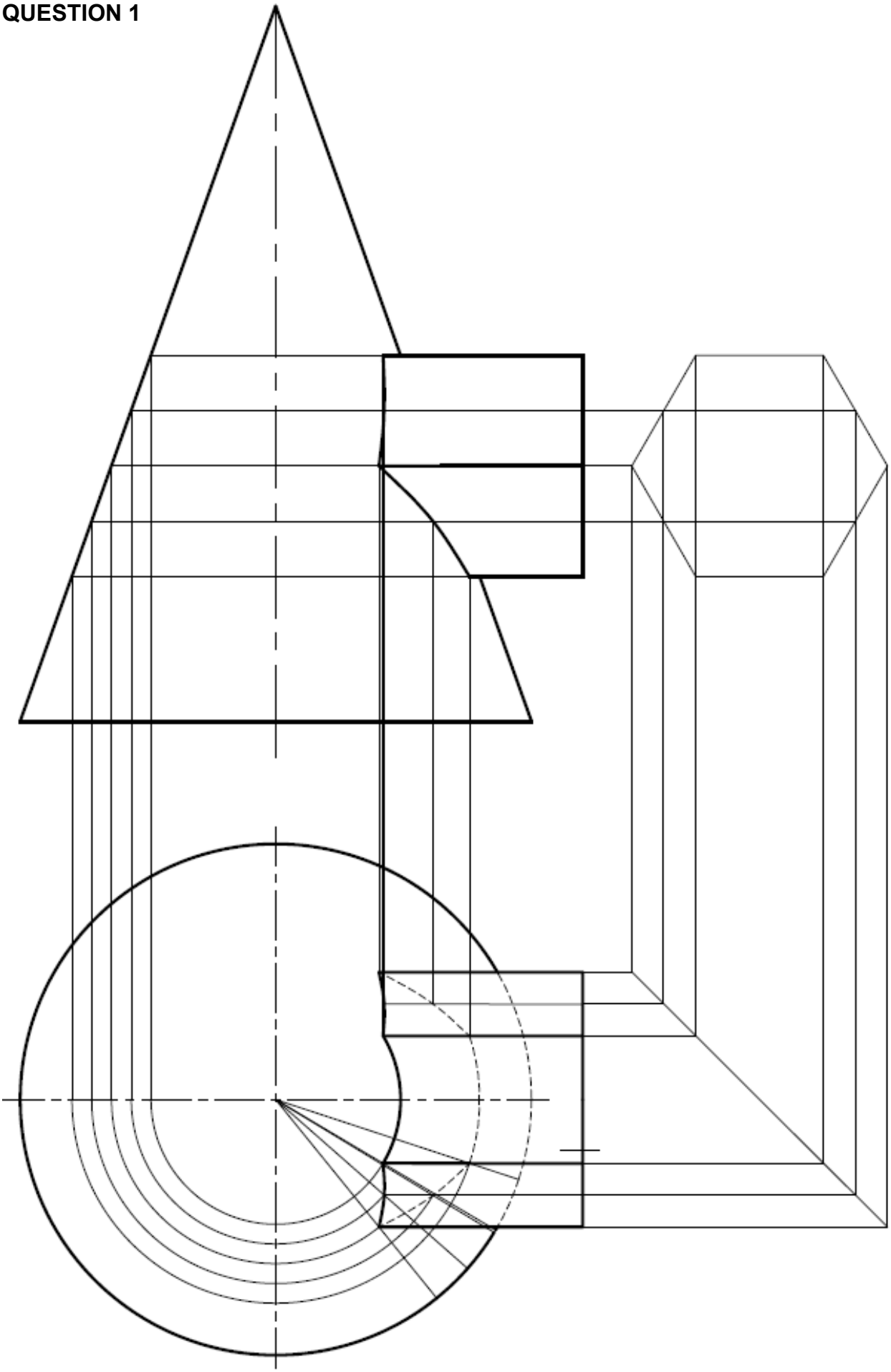

Downloaded from www.mycourses.co.za

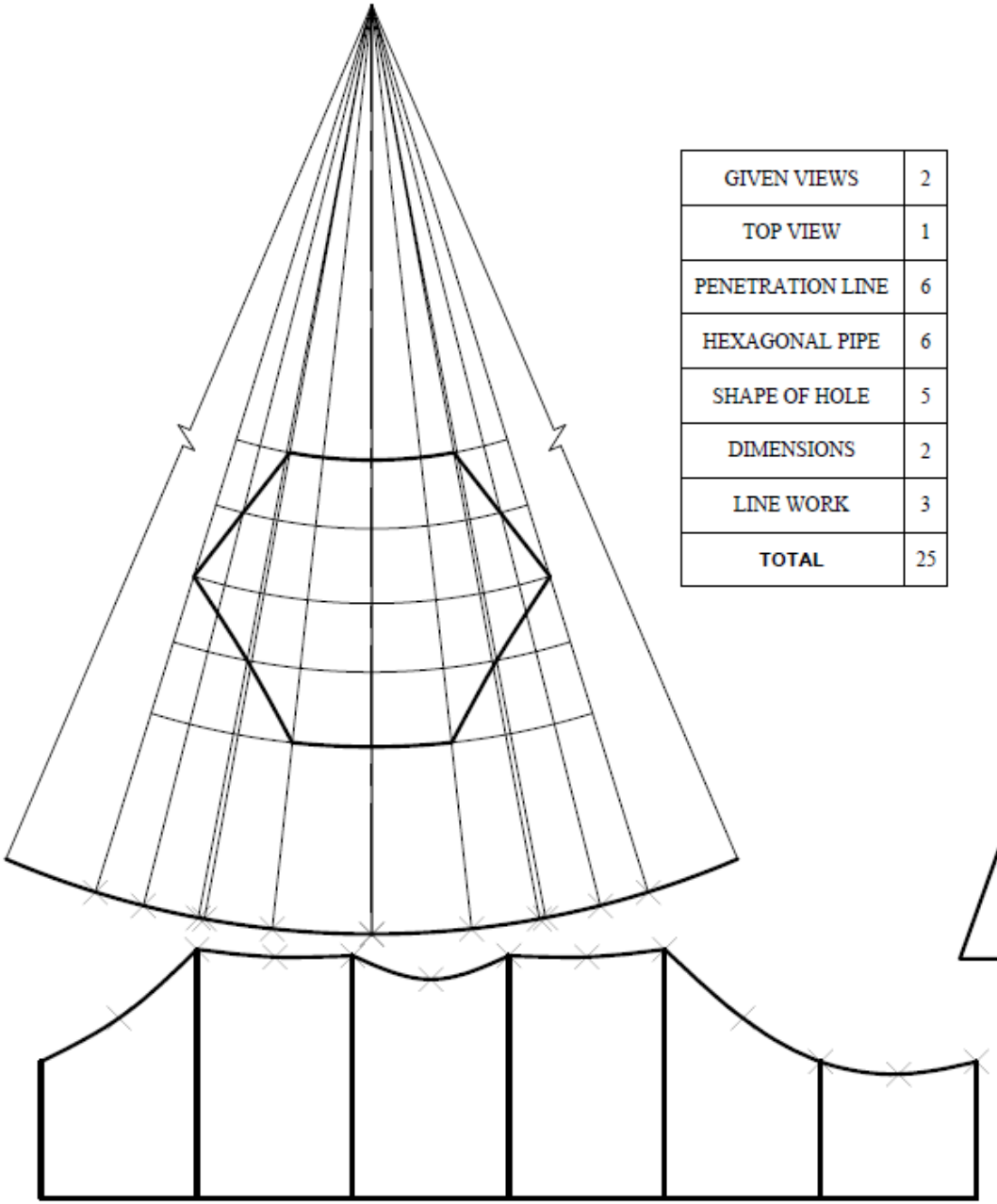

GIVEN VIEWS	2
TOP VIEW	1
PENETRATION LINE	6
HEXAGONAL PIPE	6
SHAPE OF HOLE	5
DIMENSIONS	2
LINE WORK	3
TOTAL	25

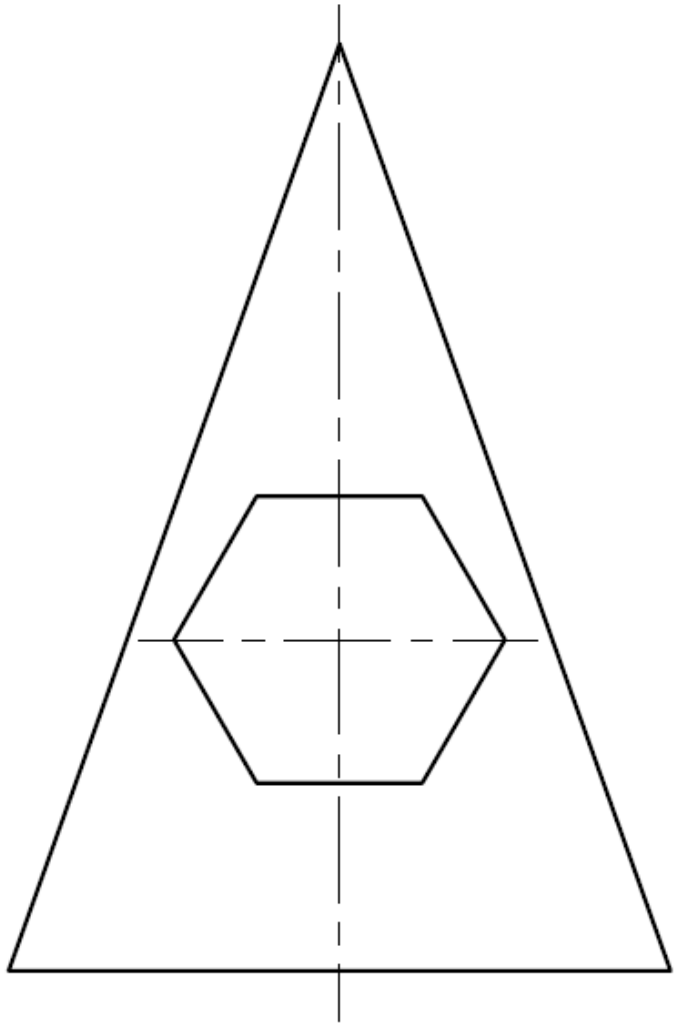

[25]

Downloaded from www.mycourses.co.za

QUESTION 2

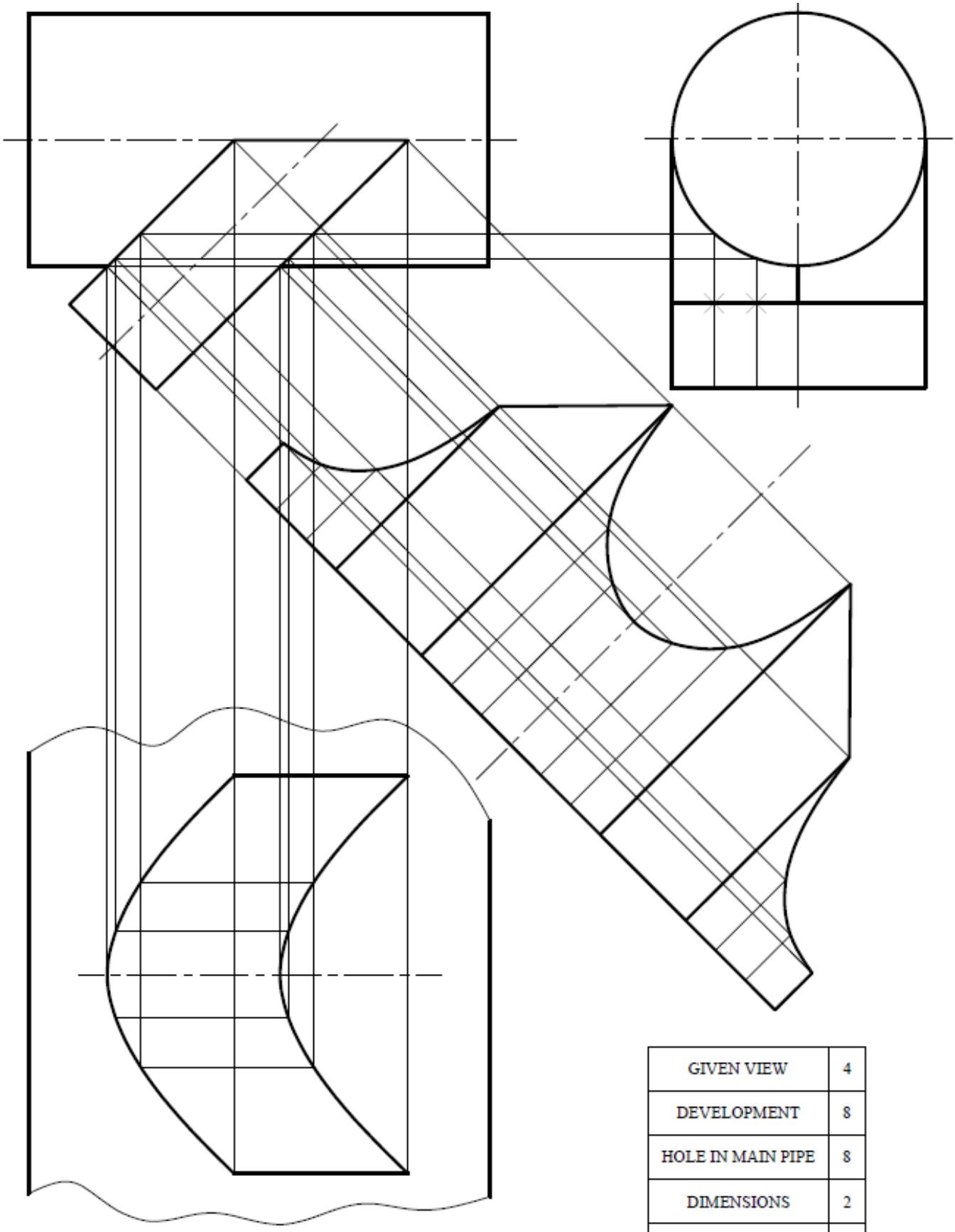

GIVEN VIEW	4
DEVELOPMENT	8
HOLE IN MAIN PIPE	8
DIMENSIONS	2
LINE WORK	3
TOTAL	25

[25]

Downloaded from www.mycourses.co.za

QUESTION 3

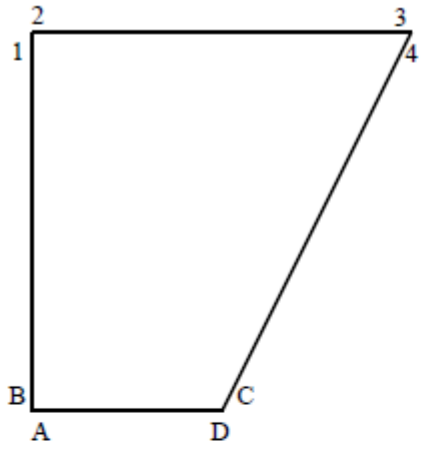

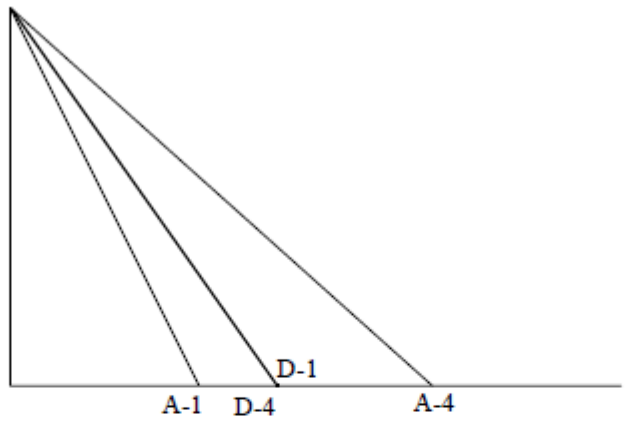

GIVEN VIEW	2
DEVELOPMENT	18
DIMENSIONS	2
LINEWORK	3
TOTAL	25

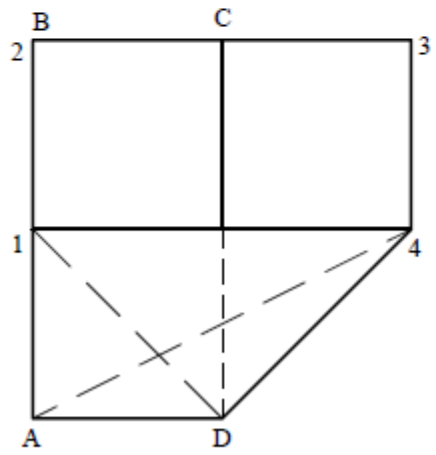

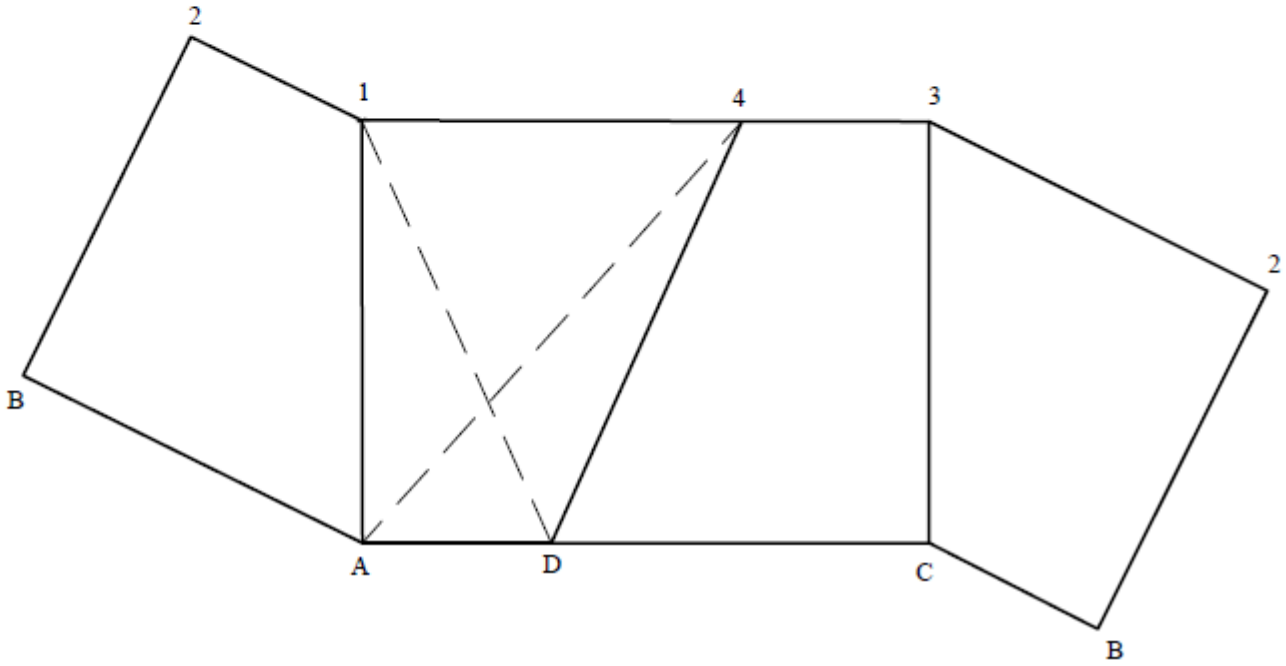

[25]

Downloaded from www.mycourses.co.za

QUESTION 4

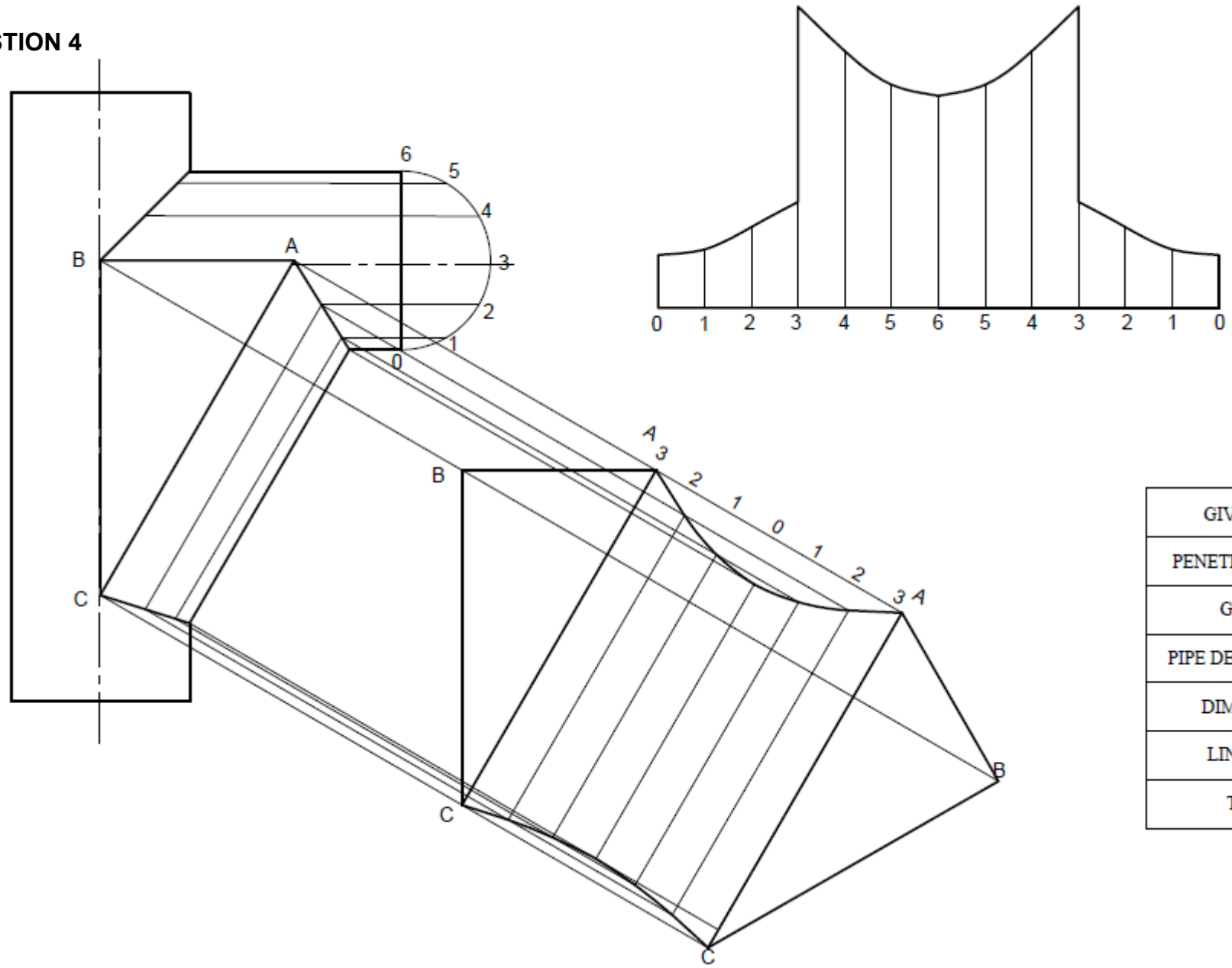

GIVEN VIEW	2
PENETRATION LINE	4
GUSSET	8
PIPE DEVELOPMENT	6
DIMENSIONS	2
LINE WORK	3
TOTAL	25

[25]

Downloaded from www.mycourses.co.za

QUESTION 5

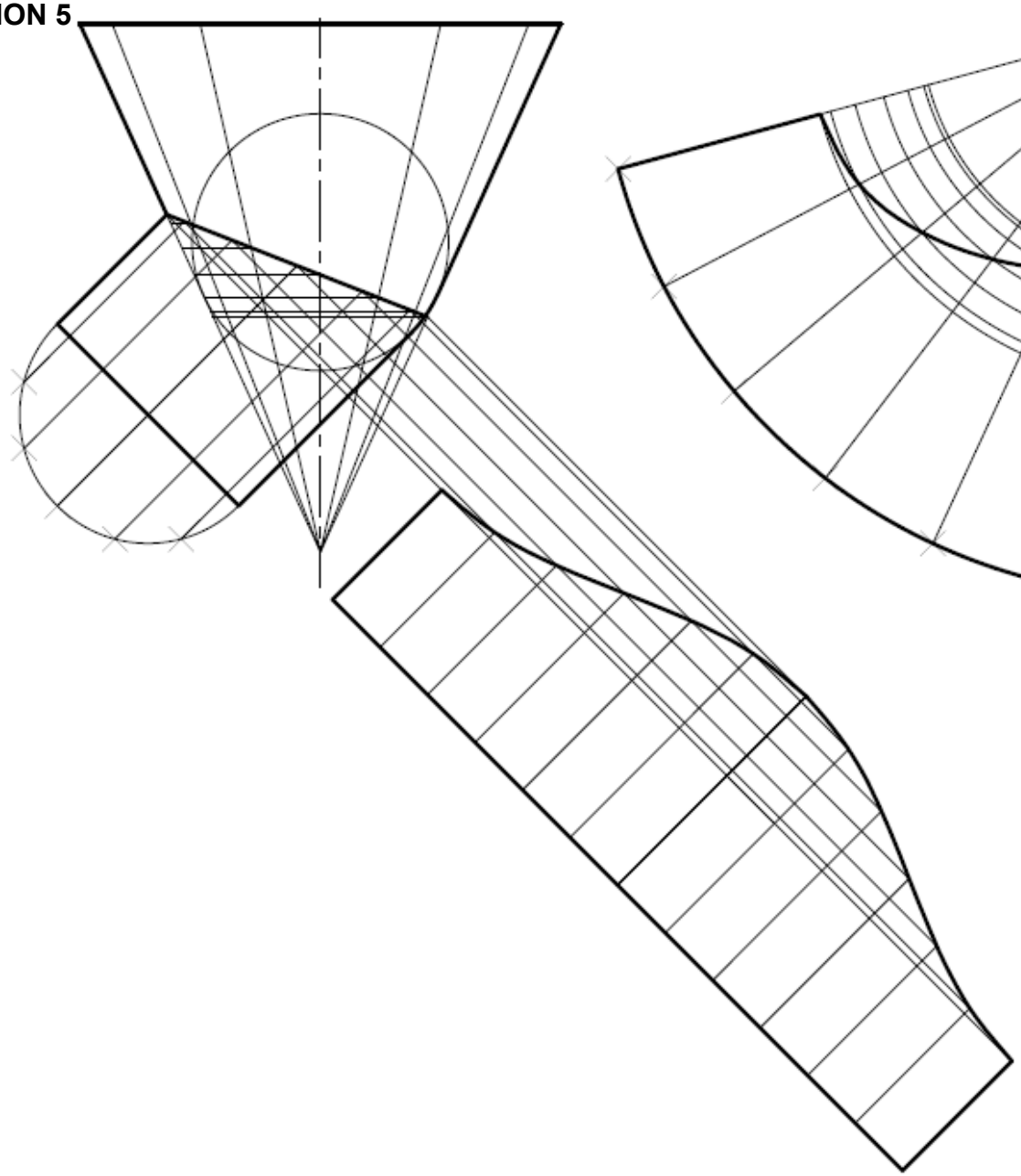

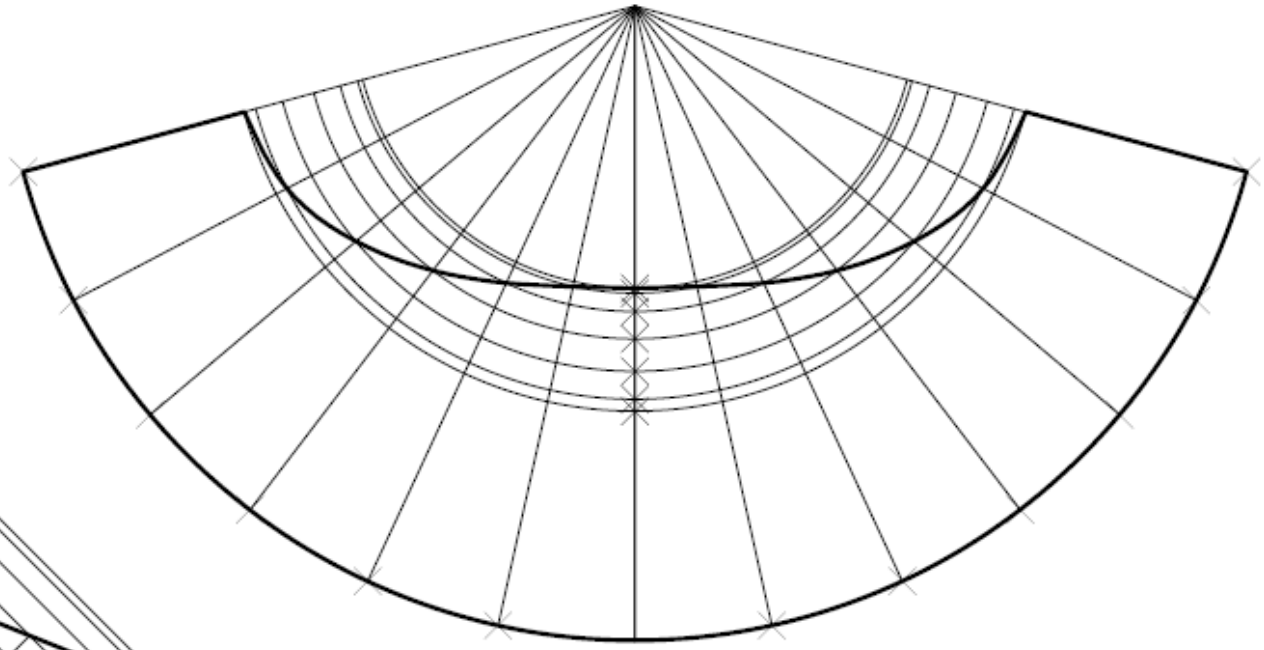

GIVEN VIEW	2
PENETRATION LINE	4
DEVELOPMENT OF CONE	8
DEVELOPMENT OF PIPE	6
DIMENSIONS	2
LINE WORK	3
TOTAL	25

TOTAL: 100

Copyright reserved

Downloaded from www.mycourses.co.za