higher education & training

Department:
Higher Education and Training
REPUBLIC OF SOUTH AFRICA

T940(E)(A6)T
APRIL EXAMINATION

NATIONAL CERTIFICATE

MATHEMATICS N2

(16030192)

6 April 2016 (X-Paper)
9:00–12:00

REQUIREMENTS: **Two sheets of graph paper**
Scientific calculators may be used.

This question paper consists of 7 pages and 1 formula sheet of 2 pages.

Copyright reserved

Downloaded from www.mycourses.co.za

DEPARTMENT OF HIGHER EDUCATION AND TRAINING
REPUBLIC OF SOUTH AFRICA

NATIONAL CERTIFICATE
MATHEMATICS N2
TIME: 3 HOURS
MARKS: 100

INSTRUCTIONS AND INFORMATION

1. Answer ALL the questions.
2. Read ALL the questions carefully.
3. Number the answers according to the numbering system used in this question paper.
4. Show ALL formulae and intermediate steps and simplify where possible.
5. Questions may be answered in any order, but subsections of questions must be kept together.
6. Use only BLUE or BLACK ink.
7. ALL final answers must be rounded off to THREE decimal places.
8. Write neatly and legibly.

Copyright reserved

Downloaded from www.mycourses.co.za

QUESTION 1

1.1 Fully factorise the following expressions:

1.1.1 $2x^2a - 8a - 8x^2 + 32$ (4)

1.1.2 $3x^3y - 12x^2y + 9xy$ (3)

1.2 Simplify the following fractions:

1.2.1 $\frac{2}{x} + \frac{2x}{3} - \frac{3x}{2}$ (3)

1.2.2 $1 - \frac{3-a}{3a}$ (3)

1.2.3 $\frac{2ax - 4a}{x^2 - 2x - 3} \div \frac{1}{4x - 12} \times \frac{x+1}{4ax - 8a}$ (5)

[18]

QUESTION 2

2.1 Solve the following equation by using the quadratic formula:
$-3x^2 - 4x = -5$ (4)

2.2 Change the subject of the formulas to the symbol in brackets:

2.2.1 $B = \sqrt{\frac{pq}{Kx}}$ .....(x) (3)

2.2.2. $I = \frac{nE}{R + nr}$ .....(n) (3)

2.3 9 ℓ petrol and a can of oil cost R137.81 together. Peter buys 14 ℓ petrol and a can of oil for R198.26. What is the price of one litre of petrol and one can of oil? (4)

[14]

Downloaded from www.mycourses.co.za

QUESTION 3

3.1 Simplify:

$$\frac{a^5b^3}{a^{-2}b^4}\times\sqrt{\sqrt[3]{a^{18}b^{36}}}$$

(4)

3.2 Solve for x:

$3.2^x = 24$ (3)

3.3 Simplify with the aid of logarithmic laws:

$$x=\frac{13{,}4^5\times\sqrt{265}}{(12{,}8)(54{,}6)}$$

Show ALL the steps. (Answers only are not acceptable). (5)

3.4 Prove that $\dfrac{\log_x 9+\log_x 81-\log_x 3}{\log_x 2187}=\dfrac{5}{7}$ (4)

[16]

QUESTION 4

4.1 A pulley turns at 3 500 revolutions per minute.
Calculate:

4.1.1 The angular velocity of the pulley in radians per second.

4.1.2 The diameter of the pulley if the circumferential velocity is 2 015 cm/s.

(2 x 3) (6)

4.2 A sector of a circle has an arc of 22,5 cm, which subtends an angle θ.
If the diameter of the circle is 48 cm, calculate:

4.2.1 The magnitude of the angle θ in degrees. (3)

4.2.2 The area of the circle sector. (2)

4.3 Consider FIGURE 1 below. A paperweight, in the shape of a cone, which containing a liquid has a slant height, AC = 13,2 cm and diameter, BC =16 cm. Determine the following:

4.3.1 AD, the perpendicular height of the paperweight. (2)

4.3.2 How many millilitres of liquid will the paperweight hold when full? (3)

Downloaded from www.mycourses.co.za

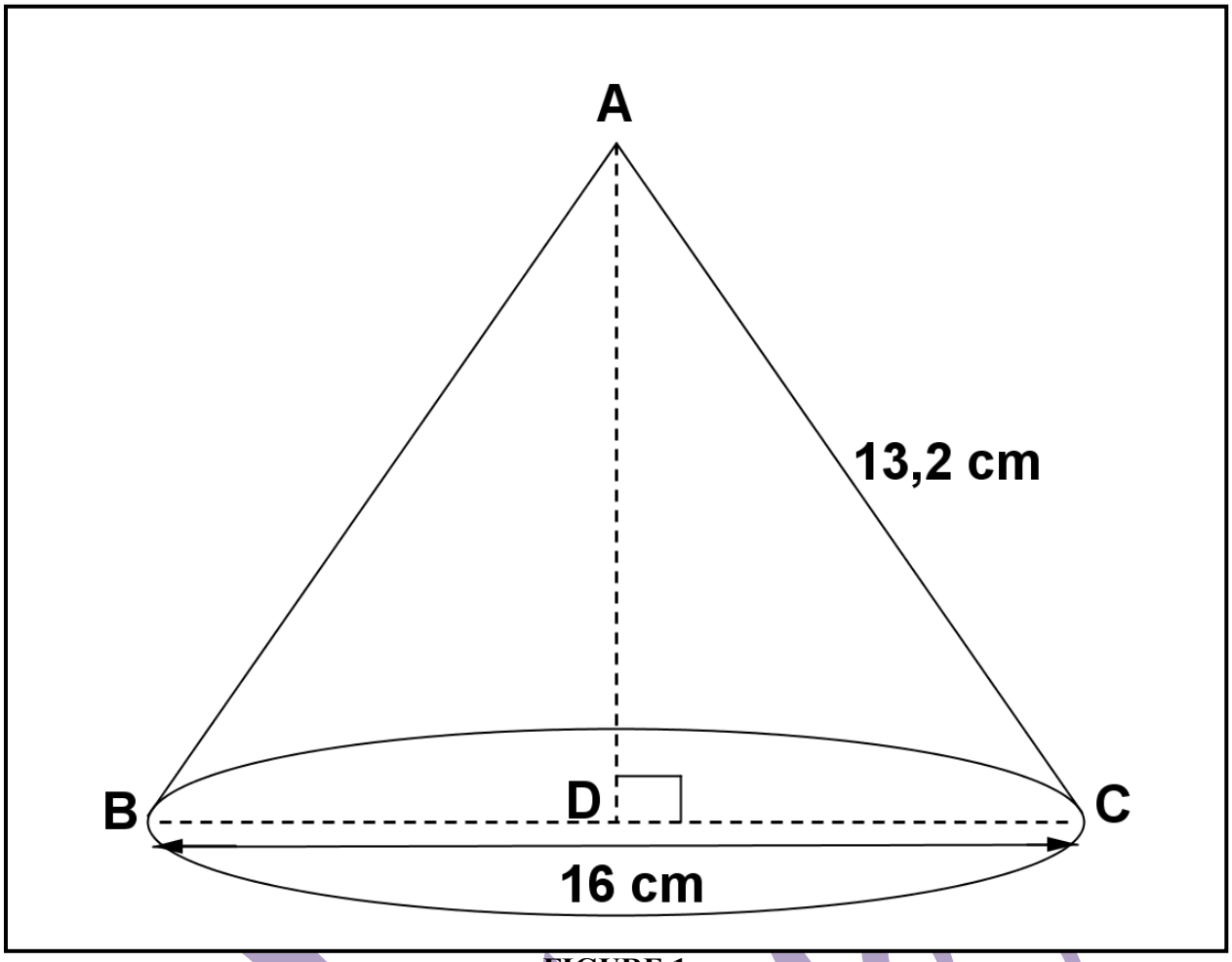

FIGURE 1

4.4 An irregular figure with one horizontal straight side is divided into 7 vertical strips of 8 mm wide each. The ordinates dividing these strips have the following lengths measured in cm: 0; 12; 13; 21; 24; 23; 18; and 0.

Calculate the area of the figure. (4)

[20]

Downloaded from www.mycourses.co.za

QUESTION 5

5.1 Consider FIGURE 2 below. ΔABC and ΔACD are two right-angled triangles with AB = 134,5 cm, AD = 56,9 cm and BC = 128 cm. Determine the following:

5.1.1 The magnitude of the angle θ.

5.1.2 The length of side AC.

5.1.3 The magnitude of the angle β. Give your answer for β in radians.

(3 x 3) (9)

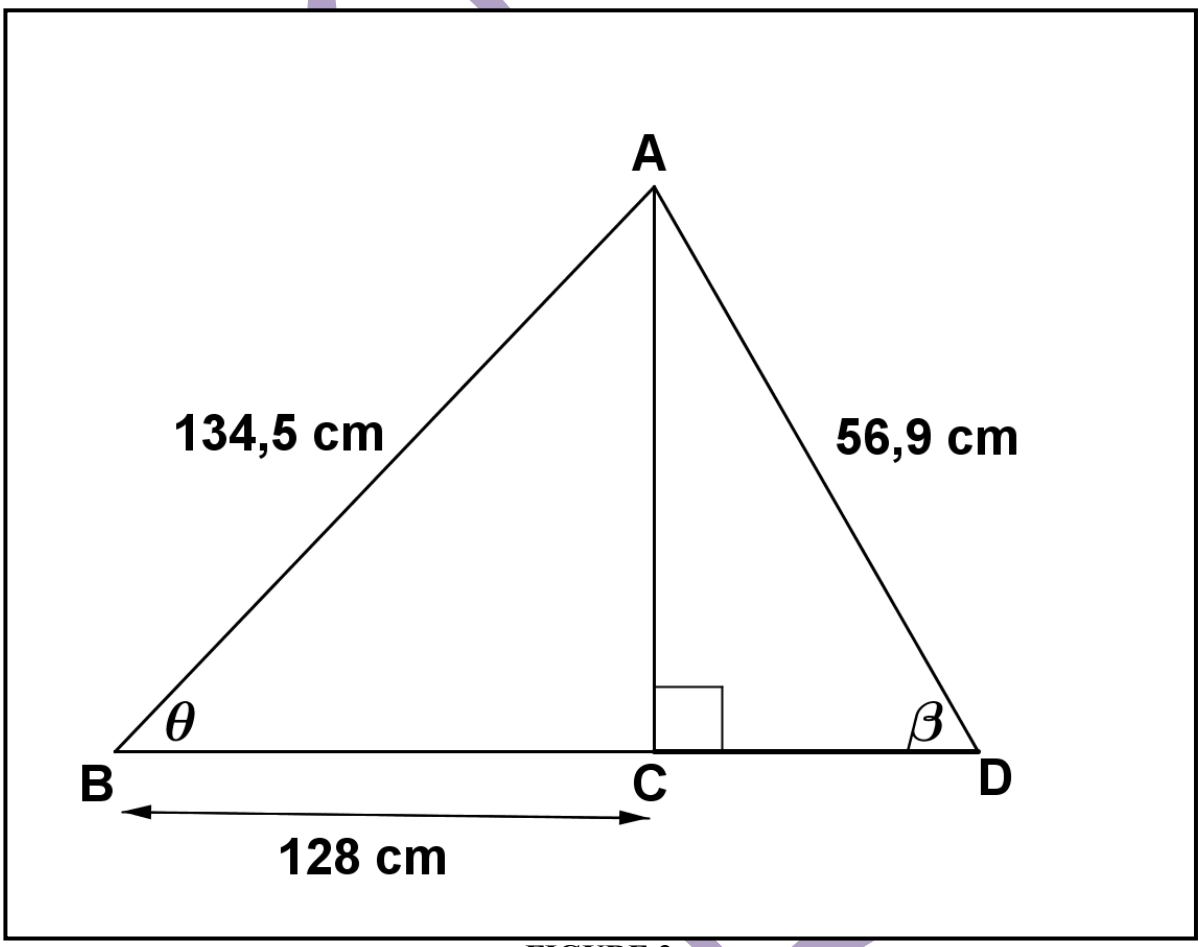

FIGURE 2

5.2 Calculate the value of A for the following:
$3{,}5\tan A + 7 = 0$; $A \in [0^\circ; 360^\circ]$ (3)

5.3 An observer is standing 25 m from the foot of the tree. The angle of elevation to the top of a tree is 57°. Calculate the height of the tree. (4)

[16]

Downloaded from www.mycourses.co.za

QUESTION 6

6.1 Draw the following graph on its own system of axes using graph paper:

$y = \cos x - \frac{1}{2}$; $0^\circ \leq x \leq 360^\circ$ (3)

6.2 Given: function $y = x^2 - 4x - 5$

Determine the following:

6.2.1 Zero points of the function (2)

6.2.2 y-intercept of the function (1)

6.2.3 The axis of symmetry (1)

6.2.4 The coordinates of the turning point (2)

Hence, draw the graph of $y = x^2 - 4x - 5$ on a system of axes, using graph paper. (3)

6.3 Draw the graph of $x - y = 5$ on the same system of axes used for QUESTION 6.2. (2)

6.4 Read from the graph the coordinates of the point where the two graphs in QUESTION 6.3 intersect. (2)

[16]

TOTAL: 100

Copyright reserved

Downloaded from www.mycourses.co.za

MATHEMATICS N2 - FORMULA SHEET

The right cone

Volume = $\frac{1}{3}\pi r^2 h$

Surface area $= \pi r\sqrt{h^2 + r^2} + \pi r^2$

$= \pi r\ell + \pi r^2$

The right pyramid

Volume = $\frac{1}{3}$ (area of base) × (perpendicular height)

The prism

Volume = (area of base) × (perpendicular height)

The cylinder

Volume = $\pi r^2 h$

Surface area = $2\pi r^2 + 2\pi rh$

The sphere

$V = \frac{4}{3}\pi r^3$; $A = 4\pi r^2$

Degrees and radians

180° = π rad

Sector: $\theta = \frac{\text{arc}}{\text{radius}}$ - ; $A = \frac{1}{2}r^2\theta$

Angular velocity and circumferential velocity

Angular velocity: $w = 2\pi n$

Circumferential velocity: $v = \pi Dn$

n = rotation frequency (r/s = revolution per second)

Mid-ordinate rule

$$\text{Area} = \left[\frac{\text{First ordinate+last ordinate}}{2} + \text{sum of the ordinates}\right] \times \text{distance between the ordinates}$$

= (distance between ordinates) × (sum of mid-ordinates)

Graphs

Straight line: $y = mx + c$ Parabola: $y = ax^2 + bx + c$

Axis of symmetry: $x = \frac{-b}{2a}$

Roots: $x = \frac{-b \pm \sqrt{b^2 - 4ac}}{2a}$

Downloaded from www.mycourses.co.za

Trigonometry

$90° < \theta < 180°$ $\sin\ \theta = \sin(180° - \theta)$ $\cos\ \theta = -\cos(180° - \theta)$

$\tan\ \theta = -\tan(180° - \theta)$

Reciprocal Identities

$\sec x = \dfrac{1}{\cos x}$ $\operatorname{cosec} x = \dfrac{1}{\sin x}$ $\cot x = \dfrac{1}{\tan x}$

Segments of circles

Chord length = x Height of segment = h Diameter of circle = D

$$D = h + \frac{x^2}{4h}$$

Regular polygons

Angle subtended at centre of circumscribed circle by one side:

$$\theta = \frac{360°}{\text{number of sides}}$$

R = radius of circumscribed circle

x = length of side

$$x = 2R \sin \frac{\theta}{2}$$

Annulus: $A = \pi\left(R^2 - r^2\right)$

Copyright reserved

Downloaded from www.mycourses.co.za