higher education & training

Department:
Higher Education and Training
REPUBLIC OF SOUTH AFRICA

MARKING GUIDELINE

NATIONAL CERTIFICATE

NOVEMBER EXAMINATION

MATHEMATICS N4

25 NOVEMBER 2016

This marking guideline consists of 9 pages.

Copyright reserved

QUESTION

1.1 1.1.1

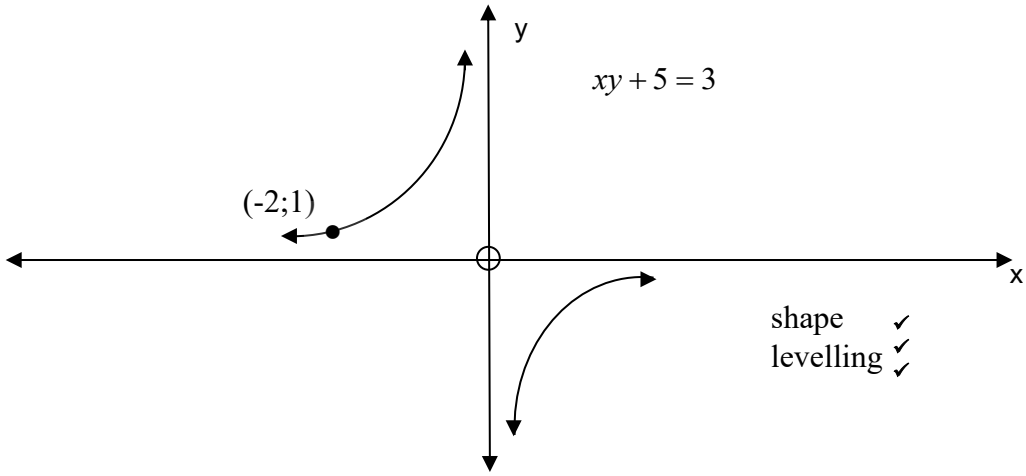

(3)

1.1.2 Yes
Function (1)

1.1.3 Discontinuous (1)

1.2

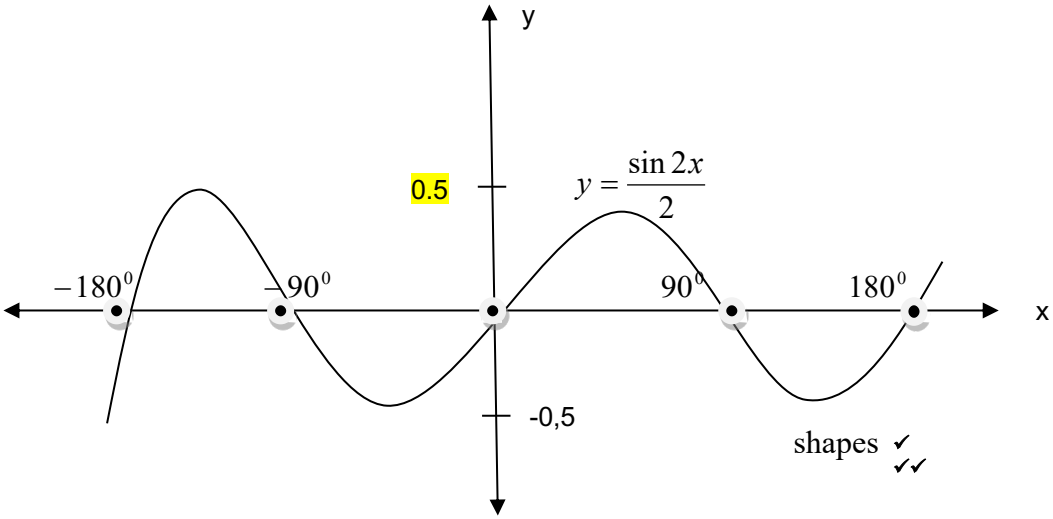

(3)

1.3

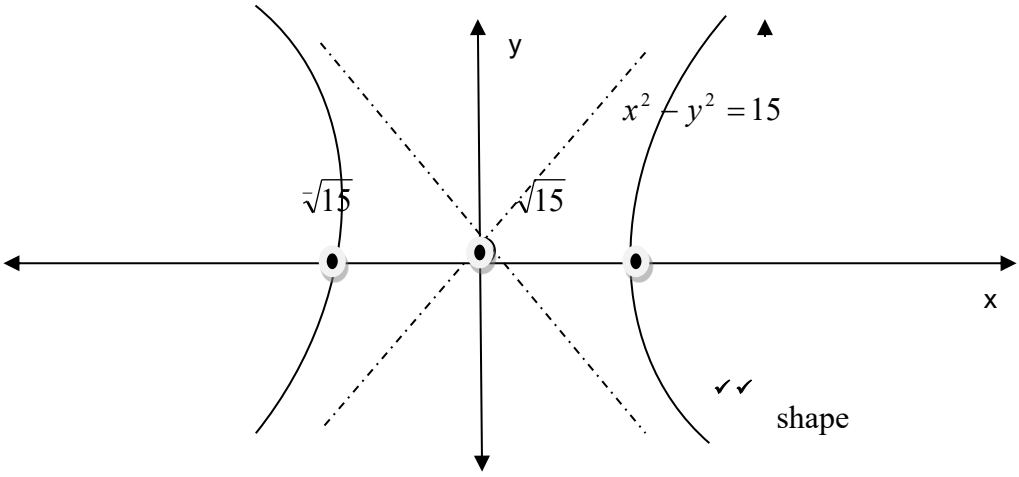

(2)

1.4

$$|D| = \begin{vmatrix} 1 & \frac{1}{2} & 1 \\ \frac{1}{3} & -\frac{1}{4} & -\frac{1}{2} \\ \frac{1}{2} & \frac{1}{5} & -\frac{1}{2} \end{vmatrix} \checkmark$$

$$|Dy| = 1\begin{vmatrix} -\frac{1}{4} & -\frac{1}{2} \\ \frac{1}{5} & -\frac{1}{2} \end{vmatrix} - \frac{1}{2}\begin{vmatrix} \frac{1}{3} & -\frac{1}{2} \\ \frac{1}{2} & -\frac{1}{2} \end{vmatrix} + 1\begin{vmatrix} \frac{1}{3} & -\frac{1}{4} \\ \frac{1}{2} & \frac{1}{5} \end{vmatrix} \checkmark$$

$$= 1\left(\frac{18}{80}\right) - \frac{1}{2}\left(\frac{1}{12}\right) + 1\left(\frac{23}{120}\right) \checkmark$$

$$= \frac{18}{80} - \frac{10}{24} + \frac{23}{120}$$

$$= 0{,}375 \checkmark$$

$$|Dy| = \begin{vmatrix} 1 & \frac{1}{2} & 1 \\ \frac{1}{3} & 1 & -\frac{1}{2} \\ \frac{1}{2} & \frac{1}{3} & -\frac{1}{2} \end{vmatrix} \checkmark$$

$$= 1\begin{vmatrix} 1 & -\frac{1}{2} \\ \frac{1}{3} & -\frac{1}{2} \end{vmatrix} - \frac{1}{2}\begin{vmatrix} \frac{1}{3} & -\frac{1}{2} \\ \frac{1}{2} & -\frac{1}{2} \end{vmatrix} + 1\begin{vmatrix} \frac{1}{3} & 1 \\ \frac{1}{2} & \frac{1}{3} \end{vmatrix} \checkmark$$

$$= 1\left(-\frac{1}{3}\right) - \frac{1}{2}\left(\frac{1}{12}\right) + 1\left(-\frac{7}{18}\right) \checkmark$$

$$= \frac{-72-9-84}{216}$$

$$= -0{,}076388 \checkmark$$

$$y = |Dy| = \frac{-0{,}076388}{0{,}375} \checkmark$$

$$|D| = -2{,}037 \checkmark$$

(10)
[20]

QUESTION 2

2.1

$$x = \frac{+18 \pm \sqrt{-144}}{6} \quad ✓$$

$$x = \frac{18 \pm j\sqrt{144}}{6} \quad ✓$$

$$x_1 = \frac{18 + j12}{6} \ \text{and/or} \quad x_2 = \frac{18 - j12}{6} \quad ✓$$

✓

$$x_1 = 3 + j2 \ \text{and/or} \quad x_2 = 3 - j2$$

(4)

2.2 2.2.1

$$\bar{z} = \frac{3}{10} + j\frac{30}{6} \quad ✓$$

(1)

2.2.2

$$r = \sqrt{\left(\frac{3}{10}\right)^2 + \left(\frac{30}{6}\right)^2}$$

$$r = \sqrt{25{,}09}$$

$$r = 5{,}009 \quad ✓$$

$$\alpha = \tan^{-1}\frac{y}{x}$$

$$\alpha = 86{,}556^\circ$$

$$\theta = 360^\circ - 86{,}566^\circ$$

$$\theta = 273{,}433^\circ \quad ✓$$

(2)

2.2.3

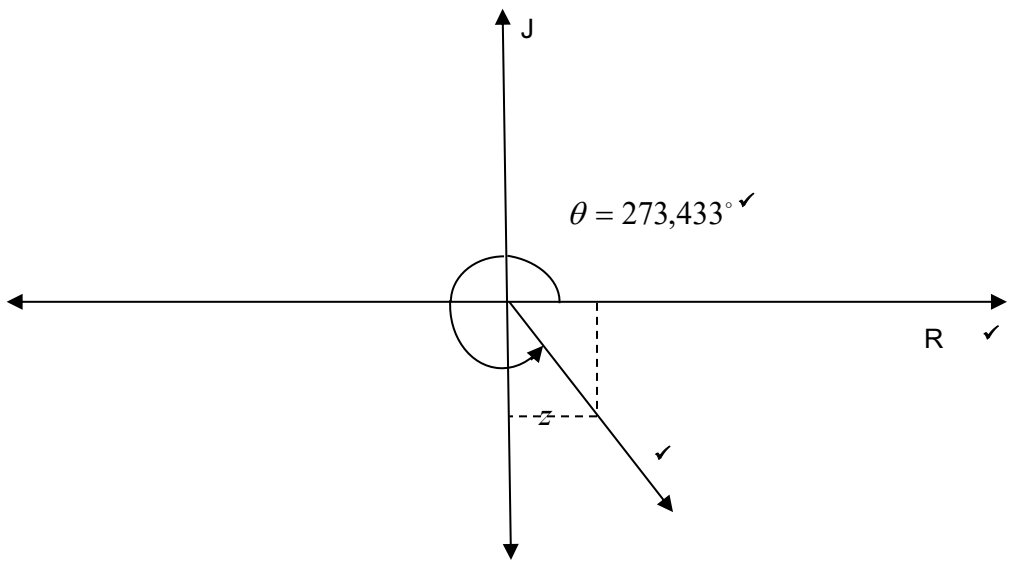

(3)

2.3

$$[(2x+5y)-(x-3y)][(2x+5y)^2 + (2x^2 - 11xy + 15y^2) + (x-3y)^2]$$

✓ ✓ ✓

(3)

2.4

$$te^{at} = \frac{P + \cos x}{\sin x} \checkmark$$

$$e^{at} = \frac{P + \cos x}{t \sin x} \checkmark$$

$$at = \ell n\left(\frac{P + \cos x}{t \sin x}\right) \checkmark$$

$$a = \frac{\ell n\left(\frac{P + \cos x}{t \sin x}\right)}{t} \checkmark$$

(4)

2.5

$$(2y + 2)\ell n5 = (5y - 1)\ell n3 \checkmark$$

$$3{,}219y + 3{,}219 = 5{,}493y - 1{,}099 \checkmark$$

$$2{,}274y = 4{,}318$$

$$y = 1{,}899 \checkmark$$

(3)

[20]

QUESTION 3

3.1

$$\tan(x + y) = \frac{\tan x + \tan y}{1 - \tan x . \tan y}$$

$$= \frac{-\frac{1}{2} + -\frac{1}{3}}{1 - \left(-\frac{1}{2}\right).\left(-\frac{1}{3}\right)} \checkmark$$

$$= \frac{-\frac{5}{6}}{1 - \frac{1}{6}} \checkmark$$

$$= -\frac{5}{6} \times \frac{6}{5}$$

$$= -1 \checkmark$$

(3)

3.2

$$\frac{2\sin\theta\cos\theta}{2} \checkmark + \frac{(\sin\theta + \cos\theta)(\sin^2\theta - \sin\theta\cos\theta) \checkmark + \cos^2}{\sin\theta + \cos\theta}$$

$$= \sin\theta\cos\theta + \sin^2\theta - \sin\theta\cos\theta + \cos^2\theta \checkmark$$

$$= \sin\theta\cos\theta + 1 - \sin\theta\cos\theta \checkmark$$

$$= 1 \checkmark$$

(5)

3.3

$$\cos 22{,}5^\circ = \cos\frac{45^\circ}{2} = \pm\sqrt{\frac{\cos 45^\circ + 1}{2}} \checkmark$$

$$= \pm\sqrt{\frac{\frac{\sqrt{2}+1}{2}}{2}} \checkmark$$

$$= \pm\sqrt{\frac{\sqrt{2}+2}{2}} \checkmark$$

$$= \pm\frac{\sqrt{\sqrt{2}+2}}{2} \checkmark$$

(4)

3.4

$$\frac{1+2\sin\theta}{\cos\theta + 2\sin\cos\theta} \checkmark$$

$$\frac{1+2\sin\theta}{\cos\theta(+2\sin\theta)} \checkmark$$

$$\frac{1}{\cos\theta} \checkmark$$

$$= \sec\theta$$

(3)

3.5

$$5(\sec^2\theta - 1) + 8\sec\theta - 1 = 0 \checkmark$$

$$5\sec^2\theta + 8\sec\theta - 6 = 0$$

$$\sec\theta = \frac{-8 \pm \sqrt{64 - 4(5)(-6)}}{10}$$

$$\sec\theta = \frac{-8 \pm \sqrt{184}}{10} \checkmark$$

$$\sec\theta = 0{,}556 \quad \textit{and / or} \quad \sec\theta = -2{,}156$$

$$\theta_1 = \textit{invalid} \checkmark$$

$$\theta_2 = 180^\circ - 2$$

$$= 180^\circ - 62{,}366^\circ$$

$$= 117{,}634^0 \checkmark$$

$$\theta_3 = 180^\circ + 62{,}366^\circ$$

$$= 242{,}366^\circ \checkmark$$

(5)

[20]

QUESTION 4

4.1 $\frac{dy}{dx} = 3(\pi^x)\ell n\pi + \frac{1}{3}\left(\frac{1}{x\ell n3}\right) + \frac{1\cos ec^2 x}{3} - \frac{1}{2\sqrt{x}} - 3\cos ecx\cot$ ✓ ✓ ✓ ✓ ✓ (5)

4.2 $u = \sqrt{x}$

$u^1 = \frac{1}{2\sqrt{x}}$ ✓

$v = x^2 + x + 1$ ✓

$v^1 = 2x + 1$ ✓

$\frac{dy}{dx} = \sqrt{x}(2x+1) + \frac{1}{2\sqrt{x}}(x^2 + x + 1)$ ✓ (4)

4.3 $\frac{dy}{dx} = 9x^2 + 18x$ ✓

$\frac{d^2y}{dx^2} = 18x + 18$ ✓

$18x + 18 = 0$

$18x = -18$ ✓

$x = -1$ ✓ (4)

4.4 $\frac{dy}{dx} = 6x^2 - 8$

$6x^2 - 8 = 0$ ✓

$6x^2 = 8$

$x_1 = \frac{2}{\sqrt{3}}$ ✓ and $x_2 = -\frac{2}{\sqrt{3}}$ ✓

$y_1 = 2\left(\frac{2}{\sqrt{3}}\right)^3 - 8\left(\frac{2}{\sqrt{3}}\right)$

$= -6{,}155$ ✓

$y_2 = 2\left(\frac{2}{-\sqrt{3}}\right)^3 - 8\left(\frac{2}{-\sqrt{3}}\right)$

$= 6{,}155$ ✓

$at \quad x = \frac{2}{\sqrt{3}} \quad \frac{d^2y}{dx^2} > 0 \quad and \quad at\, x = \frac{-2}{\sqrt{3}} \quad \frac{d^2y}{dx^2} < 0$

$m\left(\frac{2}{\sqrt{3}}; -6{,}155\right)$ ✓ $M\left(\frac{-2}{\sqrt{3}}; 6{,}155\right)$ ✓ (7)

[20]

QUESTION 5

5.1 5.1.1

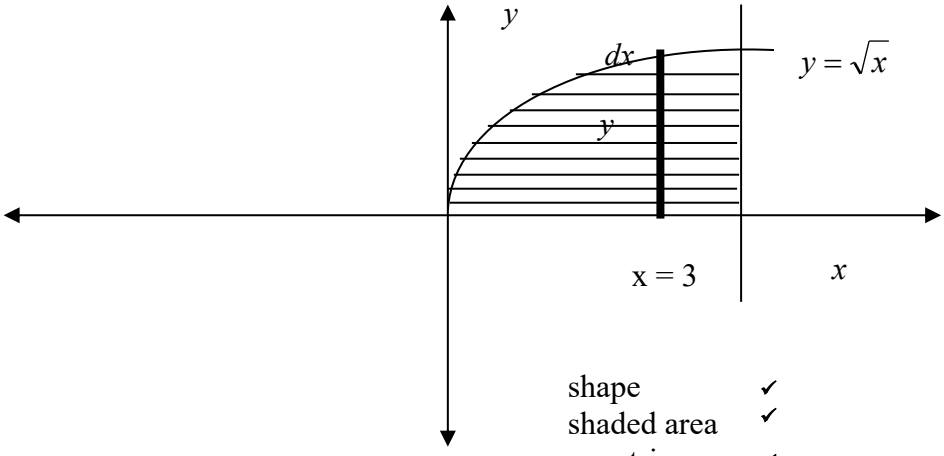

shape ✓
shaded area ✓
rep strip ✓ (3)

5.1.2

$$Aox = \int_0^3 \sqrt{x}dx \quad ✓$$

$$= \left[\frac{x^{\frac{3}{2}}}{\frac{3}{2}}\right]_0^3 \quad ✓$$

$$= \left[\frac{3^{\frac{3}{2}}}{\frac{3}{2}} - 0\right] \quad ✓$$

$$= 3{,}464u^2 \quad ✓$$ (4)

5.2

$$\left[2x - \frac{x^{\frac{3}{2}}}{\frac{3}{2}}\right]_0^2 \quad ✓$$

$$= \left[2(2) - \frac{2^{\frac{3}{2}}}{\frac{3}{2}}\right] - 0 \quad ✓$$

$$= 2{,}114 \quad ✓$$ (3)

5.3

$$3x^3 + \frac{6}{\sqrt{x}} + \frac{3.7^{-3x}}{-3.\ell n7} - \frac{4\ell n \sec \frac{4}{x}}{4} - 3\sec x + c \quad ✓$$

$$\underset{✓}{3x^3} + \underset{✓}{\frac{6}{\sqrt{x}}} - \frac{7^{-3x}}{\ell n7} \underset{✓}{-} \ell n \underset{✓}{\sec} \frac{4}{x} \underset{✓}{-} 3\sec x \underset{✓}{+} c$$

(7)

5.4 $\frac{\sin 2y}{2} \underset{✓}{-} \frac{\cos 2y}{2} \underset{✓}{+} c$ ✓

(3)

[20]

TOTAL: 100

Copyright reserved