higher education & training

Department:
Higher Education and Training
REPUBLIC OF SOUTH AFRICA

NATIONAL CERTIFICATE

INDUSTRIAL ELECTRONICS N4

(8080164)

28 July 2021 (X-paper)
09:00–12:00

Drawing instruments and nonprogrammable calculators may be used.

This question paper consists of 6 pages and a formula sheet of 2 pages.

074Q1G2128

Copyright reserved

DEPARTMENT OF HIGHER EDUCATION AND TRAINING
REPUBLIC OF SOUTH AFRICA

NATIONAL CERTIFICATE
INDUSTRIAL ELECTRONICS N4
TIME: 3 HOURS
MARKS: 100

INSTRUCTIONS AND INFORMATION

1. Answer all the questions.
2. Read all the questions carefully.
3. Number the answers according to the numbering system used in this question paper.
4. Start each question on a new page.
5. Only use a black or blue pen.
6. Write neatly and legibly.

Copyright reserved

QUESTION 1

1.1 Indicate whether the following statements are TRUE or FALSE by writing only 'True' or 'False' next to the question number (1.1.1–1.1.5) in the ANSWER BOOK.

1.1.1 Voltage law states that the algebraic sum of all voltages around any closed loop in a circle is equal to zero.

1.1.2 Superposition theorem states that any network can be viewed as two terminal networks and can be replaced by a single source.

1.1.3 The first step when calculating a circuit with two power sources is to short one power source.

1.1.4 If a circuit has one power source on Thevenin's circuit, one should assume that the supply voltage equals Vth.

1.1.5 The first step when calculating maximum power transfer in a circuit is to calculate Vth and Rth.

(5 × 1) (5)

1.2 Study the circuit diagram below and apply the superposition theorem to calculate the current through the 9 Ω resistor.

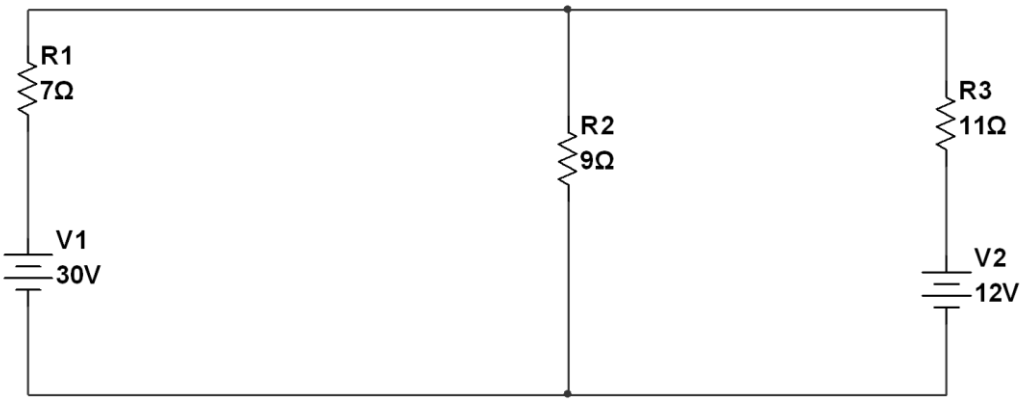

(8)
[13]

QUESTION 2

2.1 Explain how the Q factor affects bandwidth with the aid of a characteristic curve. (4)

2.2 Study the circuit diagram below and calculate the current flowing across resistor R_3 using J notation.

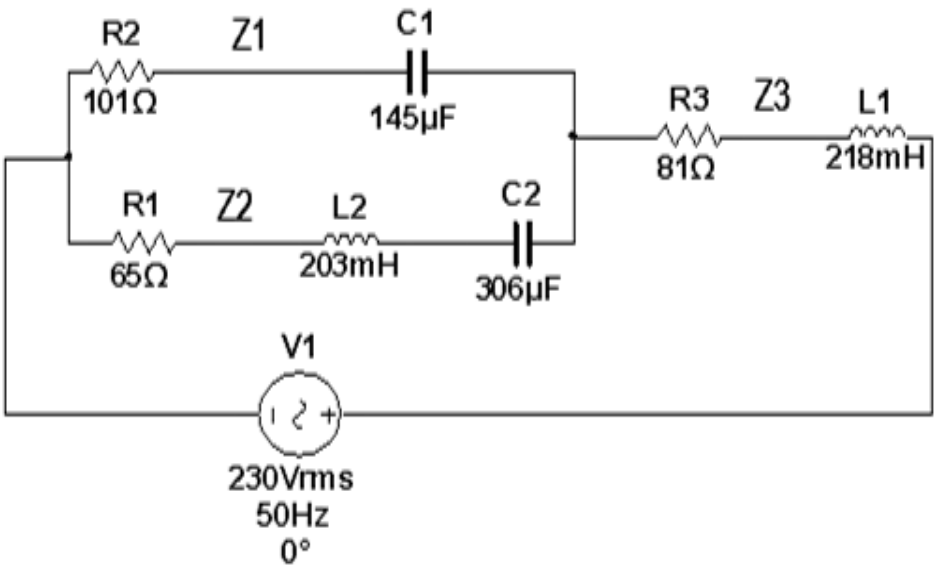

(12)
[16]

QUESTION 3

3.1 A germanium diode with I_S = 45 µF is applied with a forward bias of 0,3 V at a room temperature of 27 °C.

Calculate the diode current.

3.2 A PN junction diode has a forward resistance of 3,115 Ω at a room temperature of 29 °C.

Calculate the forward current of the diode.

3.3 Calculate the current that must flow through a Zener diode of 20 V and a series resistor of 316 Ω connected to a 28-V DC supply.

3.4 Draw a characteristic curve of a varactor diode.

(4 × 3) **[12]**

QUESTION 4

4.1 Explain the following terms:

4.1.1 Rectification

4.1.2 Peak reverse voltage

4.1.3 Ripple voltage

(3 × 2) (6)

4.2 A centre-tap full-wave rectifier has the following data: V_{ac} = 230 V and R_L= 200 Ω.

Calculate the following:

4.2.1 V_{dc} (2)

4.2.2 The ripple factor (4)

4.3 A common base emitter circuit has the following data: V_{CC} = 25 V, V_{RB} = 15 V and I_B = 10 mA.

Calculate V_{BE} and R_B. (3)

4.4 An amplifier has the following data:

- Input power = 400 Mw
- Output power = 200 W
- Input voltage = 20 V
- Output impedance = 30 Ω

Calculate the current gain in dB. (4)

[19]

QUESTION 5

5.1 Draw a two-transistor model of a silicon-controlled rectifier. (4)

5.2 How do we switch on a light-activated silicon-controlled rectifier? (2)

5.3 Explain the basic construction of a quadrac. (2)

5.4 Explain the following components of a closed-loop system:

5.4.1 Controller

5.4.2 Feedback

(2 × 2) (4)

[12]

QUESTION 6

6.1 Name ONE transducer that converts a rotating shaft position to electrical signals. (1)

6.2 Explain the operational principle of a Bourdon tube. (5)

6.3 What happens when incident light falls on a light-dependent resistor? (2)

6.4 Explain the purpose of the base terminal in the three-terminal device of a photo transistor. (2)

[10]

QUESTION 7

7.1 Draw input and output waveforms of the following amplifiers using square- and sine-wave forms:

7.1.1 Integrator

7.1.2 Differentiator

(4 × 2) (8)

7.2 A cathode ray tube may be divided into five sections.

Name FOUR of the five sections. (4)

7.3 An oscilloscope screen displays the following information:

- 0-V reference line to the peak = 3,1 cm
- From negative peak to positive peak = 6,2 cm
- Amplifier gain setting = 0,5 V/div
- Time-based setting = 4 µsec/div.

Calculate the following:

7.3.1 The amplitude and peak voltage

7.3.2 The period and frequency, if we count five divisions for a full cycle (360°)

(2 × 3) (6)

[18]

TOTAL: 100

Copyright reserved

INDUSTRIAL ELECTRONICS N4

FORMULA SHEET

$$\frac{1}{R_T} = \left(\frac{1}{R_1} + \frac{1}{R_2} + \ldots \frac{1}{R_n}\right) \qquad R_T = \frac{R_1 R_2}{R_1 + R_2} \qquad V_2 = \frac{R_2}{R_1 + R_2} \times \frac{V_T}{1}$$

$$Z = \sqrt{R^2 + (X_L - X_c)^2} \qquad Cos\,\theta° = \frac{R}{Z} \qquad P = I^2 R \qquad P = \frac{V^2}{R} \qquad P = VI\text{Cos}\theta$$

$$P = V\,.\,I \qquad F_r = \frac{1}{2\pi\sqrt{LC}} \qquad Q = \frac{X_L}{R} \qquad OF\ \frac{1}{R}\sqrt{\frac{L}{C}}$$

$$I_t = \sqrt{I_R^2 + (I_c - I_L)^2} \qquad Z = \frac{1}{\sqrt{\left(\frac{1}{R}\right)^2 + \left(\frac{1}{X_c} - \frac{1}{X_L}\right)^2}} \qquad \frac{N_1}{N_2} = \frac{V_1}{V_2} = \frac{I_2}{I_1}$$

$$V_{rms/wgk} = 0{,}707\ V_m \qquad i = I_s\left(e^{\frac{gv}{kT}} - 1\right) \qquad R = \frac{kT}{qi} \qquad V.R = \frac{V_{NL} - V_{FL}}{V_{FL}}$$

$$V_{ave/gem} = 0{,}637\ V_m$$

$$f = \frac{1}{t} \qquad \textit{Rate of change/Tempo van verandering} = -\frac{V_{in}}{CR_{in}}$$

$$V_{dc}/V_{gs} = 0{,}318\ V_m \qquad V_{dc}/V_{gs} = 0{,}637\ V_m$$

$$V_{r_{rms}}/V_{r\,wgk} = 0{,}385\,V_m \qquad V'_{r(rms)} = \frac{X_C}{R}\,.\,V_{r(rms)}$$

$$PIV = V_m \quad or/of \quad 2\,V_m$$

$$V_{r_{rms}}/V_{r_{wgk}} = \frac{V_r\ (p-p)}{2\sqrt{3}} \qquad V_{dc}/V_{gs} = V_m - \frac{V_r\ (p-p)}{2}$$

$$r = \frac{V_{r_{rms}}/V_{r_{wgk}}}{V_{dc}/V_{gs}} \qquad V_{r_{rms}}/V_{r_{wgk}} = \frac{V_{dc}/V_{gs}}{R_L\ 2\sqrt{3}\ FC}$$

$$V_{dc}/V_{gs} = V_m \quad \frac{I_{dc}/I_{gs}}{2FC} \qquad r = \frac{I_{dc}/I_{gs}}{V_{dc}/V_{gs}\ 2\sqrt{3}\ FC}$$

$$V_{r'_{rms}}/V_{r'_{wgk}} = \frac{X_c}{\sqrt{R^2 + X_c^2}} \times \frac{V_{r_{rms}}/V_{r_{wgk}}}{1} \qquad X_C = \frac{1}{2\pi fC} \qquad X_C = \frac{1}{4\pi fC} \qquad r' = \frac{V'_{r(rms)}}{V'_{dc}}$$

$$V'_{dc}/V'_{gs} = \frac{R_L}{R_L + R_S} \times \frac{V_{dc}/V_{gs}}{1} \qquad V_{r'_{rms}}/V_{r'_{wgk}} = \frac{V_{r_{rms}}/V_{r_{wgk}}}{(2\pi f)^2\ LC}$$

Copyright reserved

$$V_0 = -\left(\frac{R_f}{R_1}\right).V_i \qquad V_0 = \left(\frac{R_f}{R_1}+1\right).V_i \qquad V_{out/uit} = -\frac{1}{CR_{in}}\int V_{in}\,(t)\,dt$$

$$V_0 = -\left(\frac{R_f}{R_1}.V_1 + \frac{R_f}{R_2}.V_2 + \frac{R_f}{R_3}.V_3\right) \qquad V_0 = -\left(\frac{V_1}{R_1}+\frac{V_2}{R_2}+\frac{V_3}{R_3}\right)R_f$$

$$V_0 = -(V_1 + V_2 + V_3) \qquad V_0 = -(I_1 + I_2 + I_3)\,R_f$$

$$R_{in} = \frac{V_{be}}{I_b} \qquad R_{out}/R_{uit} = \frac{V_{ce}}{I_c} \qquad R_c = \frac{V_{cc}}{I_c} \qquad V_{out}/V_{uit} = R_1C\frac{dv_i}{dt} \qquad \beta = \frac{I_c}{I_b}$$

$$R_b = \frac{V_{cc}-V_{be}}{I_b} \qquad R_c = \frac{V_{cc}-V_{ce}}{I_c} \qquad R_c = \frac{V_{cc}-V_{ce}-V_e}{I_c} \qquad R_b = \frac{V_{cc}-V_{be}-V_e}{I_b}$$

Static current gain/Statiese stroomwins $= \dfrac{I_{out/uit}}{I_{in}}$

Dynamic current gain/Dinamiese stroomwins $= \dfrac{\Delta I_{out/uit}}{\Delta I_{in}}$

$$V_{cc} = V_{RC} + V_{ce} \qquad V_{ce} = V_{cc} - V_{RC} \qquad R = \frac{p\ell}{a}$$

$$A_p = 10\log\frac{P_{out/uit}}{P_{in}} \qquad A_v = 20\log\frac{V_{out/uit}}{V_{in}} \qquad A_i = 20\log\frac{I_{out/uit}}{I_{in}}$$

Static voltage gain/Statiese spanningswins $= \dfrac{V_{out}/V_{uit}}{V_{in}}$

Dynamic voltage gain/Dinamiese spanningswins $= \dfrac{\Delta V_{out/uit}}{\Delta V_{in}}$

$hie = \dfrac{\Delta V_{in}}{\Delta I_{in}} = \dfrac{\Delta V_{be}}{\Delta I_b}$ $\qquad V_{ce}$ = *constant/konstant*

$hre = \dfrac{\Delta V_{in}}{\Delta V_{out/uit}} = \dfrac{\Delta V_{be}}{\Delta V_{ce}}$ $\qquad I_b$ = *constant/konstant*

$hfe = \dfrac{\Delta I_{out/uit}}{\Delta I_{in}} = \dfrac{\Delta I_c}{\Delta I_b}$ $\qquad V_{ce}$ = *constant/konstant*

$hoe = \dfrac{\Delta I_{out/uit}}{\Delta V_{out/uit}} = \dfrac{\Delta I_c}{\Delta V_{ce}}$ $\qquad I_b$ = *constant/konstant*

Boltzmann's constant/
Boltzmann se konstante $= 1{,}38 \times 10^{-23}$ *J/k*

Electron charge/
Elektronlading $= 1{,}6 \times 10^{-19}$ *C*

NB: *Any applicable formula may be used.*
Enige toepaslike formule mag gebruik word.

Copyright reserved