higher education & training

Department:
Higher Education and Training
REPUBLIC OF SOUTH AFRICA

MARKING GUIDELINE

NATIONAL CERTIFICATE

INDUSTRIAL ELECTRONICS N4

7 April 2021

This marking guideline consists of 6 pages.

Copyright reserved

QUESTION 1

1.1 Short V1

$R_{s1} = 30 + 8 = 38\ \Omega$
$R_{P1} = (38 \times 7)/(38 + 7) = 5{,}911\ \Omega$
$R_{S2} = 5{,}911 + 12 = 17{,}911\ \Omega$
$R_{P2} = (17{,}911 \times 23)/(17{,}911 + 23) = 10{,}069\ \Omega$
$I_{TA} = 20/10{,}069 = 1{,}986$ A
$I_{23\Omega} = 17{,}911/(17{,}911 + 28) \times 1{,}986 = 0{,}775$ A

Short V2

$R_{S1} = 12 + 23 = 35$
$R_{P1} = (35 \times 7)/(38 + 7) = 5{,}911\ \Omega$
$R_{S2} = 5{,}833 + 8 + 30 = 43{,}833$
$I_{TB} = 15/43{,}833 = 0{,}342$ A
$I_{RS} = 7/(7 + 35) \times 0{,}342$
$= 0{,}057$ A

$I_{23} = 0{,}775 + 0{,}057 = 0{,}832$ A (7)

1.2 If several conductors meet at a point, the total current flowing towards that point is equal to the total current leaving the same point. The algebraic sum of the current is zero. (2)

1.3 Remove the load and label the terminals where the load was removed as A and B.
Calculate Thévenin's voltage V_{th} that appears across these terminals. (2)
[11]

QUESTION 2

2.1 Range of frequencies centred around F_r, F_H, F_L. (2)

2.2 $Z_T = (Z_1 \times Z_2)/(Z_1 + Z_2) + Z_3$

$108{,}35\angle -73{,}33 = (48{,}808\angle 50{,}57 \times 43{,}273\angle -18{,}653)/(31+j37{,}699 + 41 - j13.84) + Z_3$

$108{,}35\angle -73{,}33 = 2112{,}069\angle 31{,}917/(72 + j23{,}859) + Z_3$

$108{,}35\angle -73{,}33 = 2112{,}069\angle 31{,}917/75{,}85\angle 18{,}334 + Z_3$

$108{,}35\angle -73{,}33 = 27{,}845\angle 13{,}583 + Z_3$

$Z_3 = 4{,}015 - j97{,}256$

$R = 4{,}015\ \Omega$

$X_C = 1/(2 \times \pi \times 50 \times 97{,}256)$
$= 32{,}729\ \mu F$ (9)
[11]

QUESTION 3

3.1 It is a current which is produced due to the small reverse voltage when PN junction diode is reverse biased in a reverse characteristic of PN junction. Current increases in the range of nano amp (silicon) or microamp (germanium). (3)

3.2
3.2.1 False
3.2.2 True
3.2.3 True
3.2.4 False
3.2.5 True
3.2.6 False

(6 × 1) (6)

3.3 $I = KT/Rq$
$= (1{,}38 \times 10^{-23} \times 306)/(0{,}308 \times 1{,}6 \times 10^{-19})$
$= 0{,}0857$ A (2)

[11]

QUESTION 4

4.1
- Transformer: to step down voltage on the power supply
- Rectifier: the process of converting an alternating voltage to a unidirectional voltage
- Filter: process of smoothening the DC waveform (3 × 2) (6)

4.2
4.2.1 $V_m = \sqrt{2} \times 220/2 = 155{,}563$ V
$V_{dc} = 0{,}637 \times 155{,}563$
$= 99{,}094$ V

4.2.2 $V_{rms} = 220/2$
$= 110$ V

4.2.3 $V_{ac} = \sqrt{(110^2 - 99{,}094^2)}$
$= 47{,}753$ V

4.2.4 $I_m = V_m/R_L$
$= 155{,}563/210$
$= 0{,}741$ A

4.2.5 $I_{av} = V_{dc}/2\,R_L$
$= 99{,}094/(2 \times 210)$
$= 0{,}236$ A

4.2.6 $PIV = 2\,V_m$
$= 2 \times 155{,}563$
$= 311{,}126$ V

(6 × 1) (6)

[12]

QUESTION 5

5.1 5.1.1 When transistor voltages and currents are constant, the transistor is said to be operating in its steady-state, DC or static condition.

5.1.2 When transistor voltages and currents are varying, the transistor is said to be operating in its unsteady-state, AC or dynamic condition.
(2 × 2) (4)

5.2 $P_{out} = I^2_{out} \times Z_{out}$
$= 10^2 \times 35$
$= 3\ 500$ W

$Ap = 10\log(P_{out}/P_{in})$
$= 10\log(3\ 500/1\ 700)$
$= 3{,}136$ db (4)

5.3 It is the process that occurs during the period when one transistor begins to switch off and the other one starts to switch on. (2)

5.4 Unijunction transistor (1)
[11]

QUESTION 6

6.1
- Small size
- Cheap
- Low power consumption
- Highly stable
- Highly reliable (Any 3 × 1) (3)

6.2

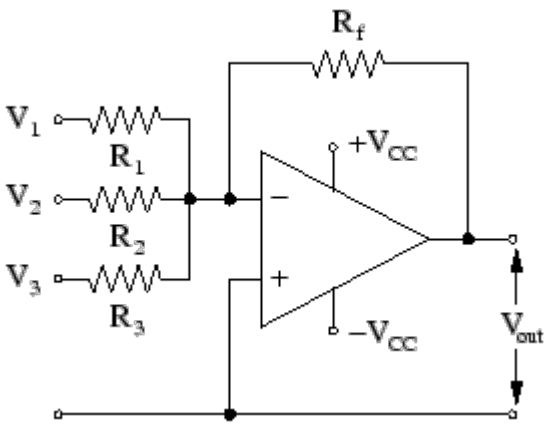

(4)

6.3 $V_o = -15 \times 10^3(7{,}5/3000 + 12{,}5/1500 + 10/15000)$
$= -172{,}5$ V (4)
[11]

QUESTION 7

7.1 When current falls below the holding current. (2)

7.2 7.2.1 The desired value is set at the reference input.

7.2.2 The SCR will be triggered by the triggering circuit.

7.2.3 The output from the load will be measured and displayed in the display unit.

7.2.4 There is no monitoring of the output taking place.

(4 × 1) (4)

7.3

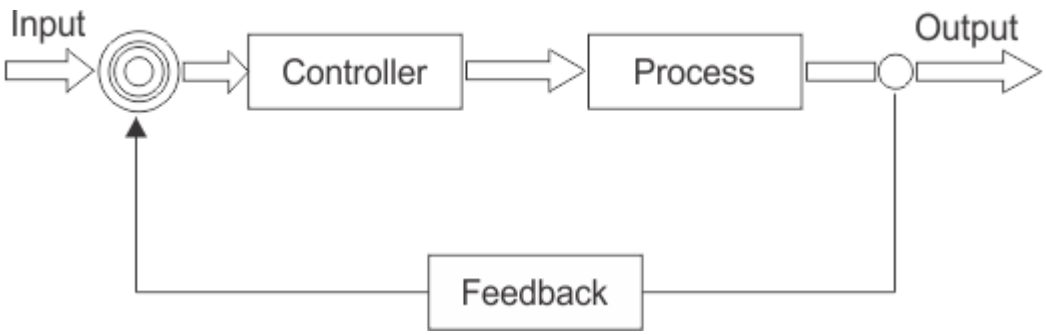

(5)
[11]

QUESTION 8

8.1 It converts the rotary shaft position to electrical signals. (2)

8.2 As pressure is applied to the bourdon tube, the resulting force attempts to straighten the Bourdon tube. When the pressure is reduced, the Bourdon tube returns to its original shape. A potentiometer is connected to the rotating shaft of the Bourdon tube. When the Bourdon tube straightens, the shaft turns and the resistance of the potentiometer changes. This change in resistance is calibrated to read angular displacement. (5)

8.3

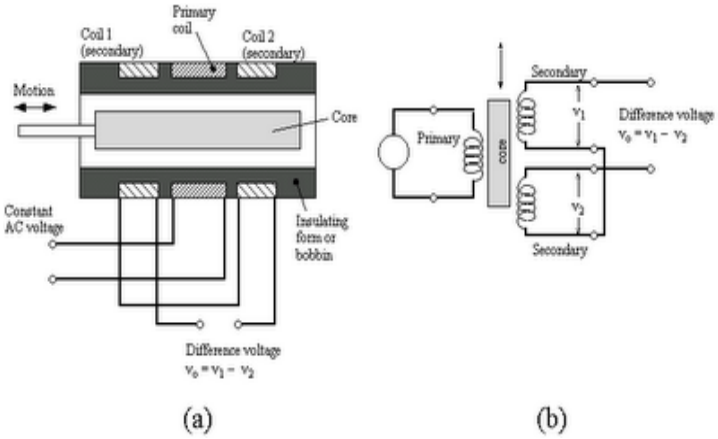

(5)
[12]

QUESTION 9

9.1
- Electron beam generation
- Focusing system
- Deflection system
- Glass envelope
- Fluorescent screen (5)

9.2
- The size of the coil
- Amount of current flowing through the coil
- Position of the coil on the neck of the tube (3)

9.3
- Electrostatic deflection
- Electromagnetic deflection (2)

[10]

TOTAL: 100

Copyright reserved