higher education & training

Department:
Higher Education and Training
REPUBLIC OF SOUTH AFRICA

# MARKING GUIDELINE

## NATIONAL CERTIFICATE

## RADIO THEORY N3

## 31 JULY 2018

**This marking guideline consists of 6 pages.**

Copyright reserved

## QUESTION 1

1.1 True
1.2 True
1.3 False
1.4 False
1.5 False
1.6 False
1.7 True
1.8 False
1.9 False
1.10 False

(10 × 1) **[10]**

## QUESTION 2

$$P_{IN} = \frac{E^2}{R} \checkmark$$
$$= \frac{(150 \times 10^{-3})^2}{500} \checkmark$$
$$= 45\mu W \checkmark$$

$$P_{OUT} = I^2 R \checkmark$$
$$= 1^2 \times 2 \checkmark$$
$$= 2W \checkmark$$

$$Gain = 10\log\frac{P_O}{P_{IN}} \checkmark$$
$$= 10\log\frac{2}{45 \times 10^{-6}} \checkmark\checkmark$$
$$= 10 \times 4{,}647$$
$$= 46{,}47dB \checkmark$$

**[10]**

## QUESTION 3

3.1
- Infinite open-loop gain
- Infinite input resistance
- Zero-output impedance
- Infinite bandwidth
- Output voltage zero when input voltage zero (5)

3.2

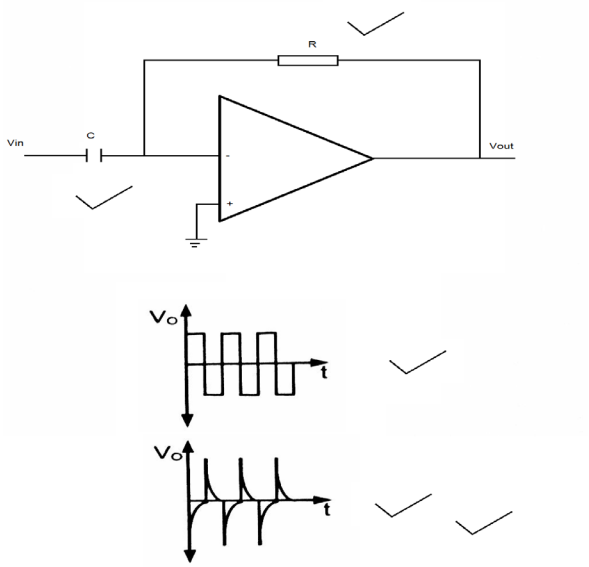


(5)
**[10]**

## QUESTION 4

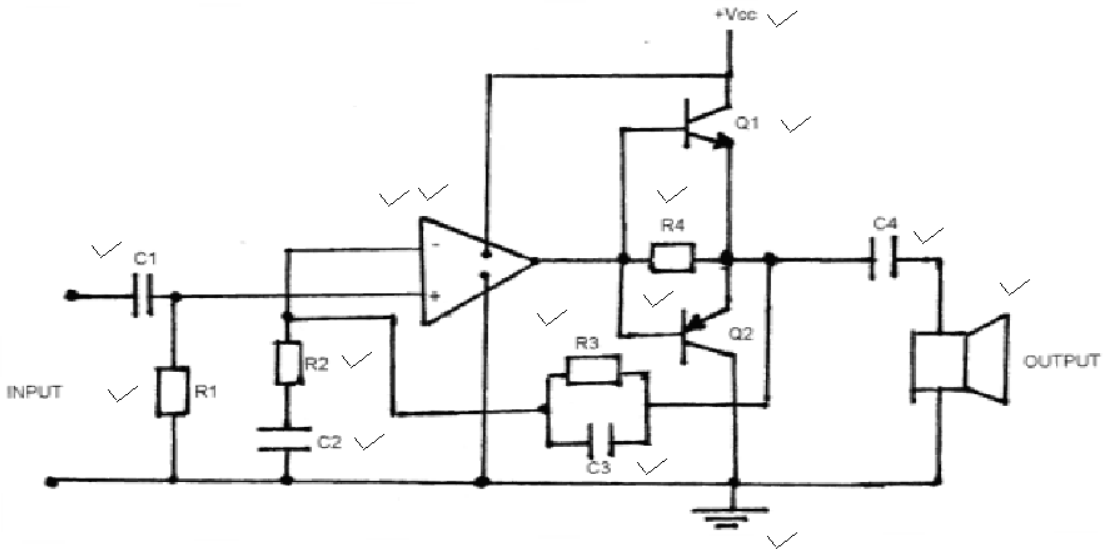


**[15]**

**QUESTION 5**

5.1 5.1.1

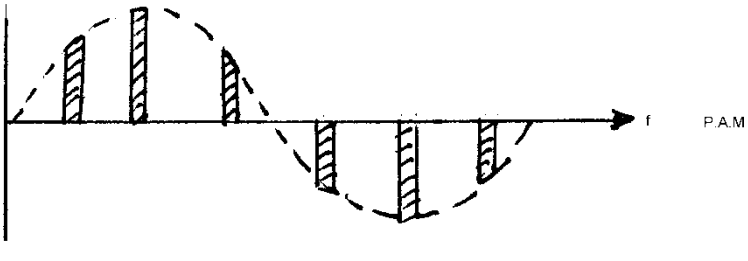


✓✓

The amplitude of each sample is varied in sympathy with the signal to be transmitted.✓

5.1.2

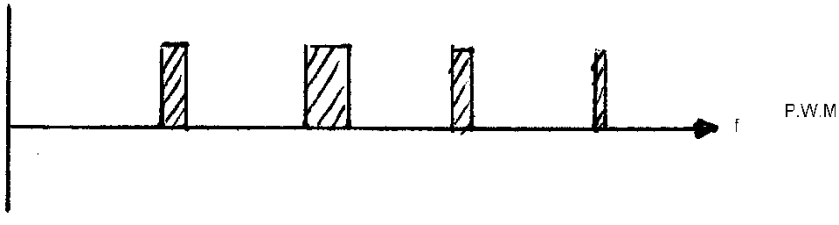


✓✓

The amplitude of each sample is kept constant and the width or duration is varied about a fixed value.✓

5.1.3

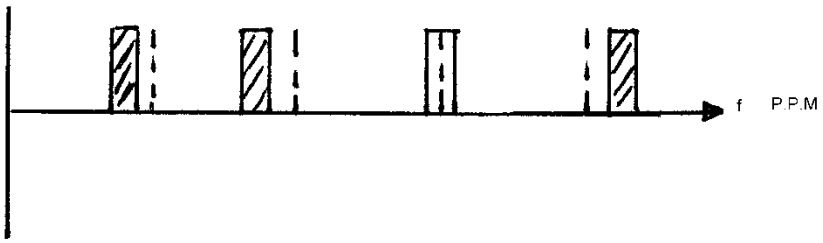


✓✓

The amplitude of the sample is kept constant but the position of the pulse is varied about some reference position.✓

(3 × 3) (9)

5.2 Modulator/demodulator (1)

**[10]**

## QUESTION 6

6.1 The purpose is to change frequency or amplitude changes of the RF signal caused by modulation to proportional current changes, to filter out the RF signal (carrier), and to regain to signal (information) eliminate carrier. (2)

6.2

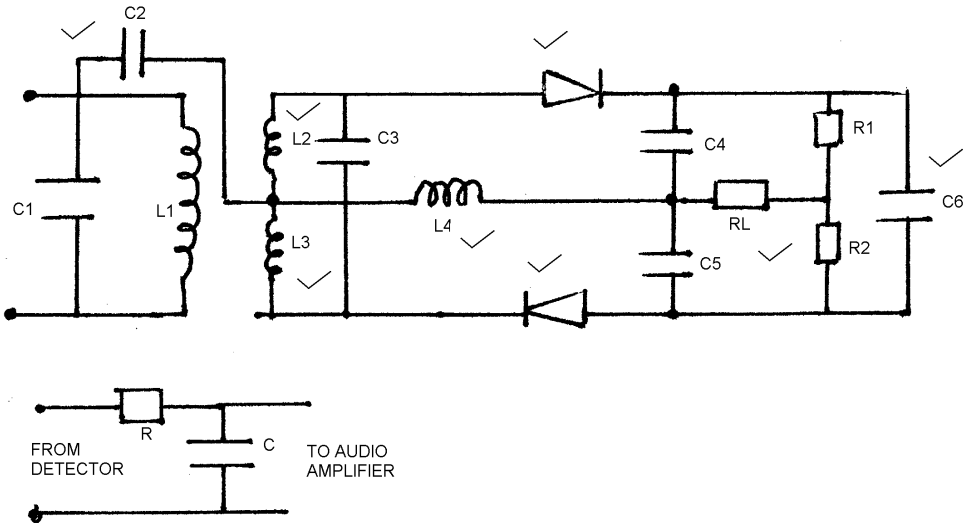


(8)

6.3 The de-emphasis circuit in the receiver reduces the high-frequency audio with the same amount as the pre-emphasis circuit increased it, thus regaining the original tonal balance. (3)

6.4 It clips the top and bottom of the RF wave removing any interference which appears as noise thus avoiding distortion. (2)

**[15]**

## QUESTION 7

7.1

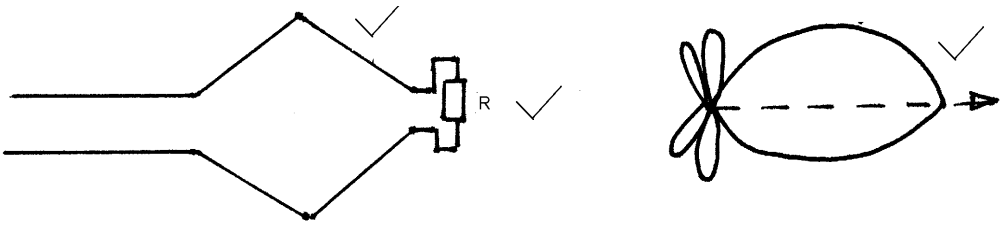


It consists of basically four legs (lengths of wire)✓ which are considered as nonresonant elements arranged as a planar rhombus.✓ Lengths of the radiators vary from 2 to 8λ and the angle of tilt varies from 40° to 70°. The antenna is correctly terminated in its characteristic impedance, thus only forward waves✓ are present. (6)

7.2 7.2.1 It is the greatest angle (between 0–90 degrees) at which a particular frequency can be directed at the ionosphere and still be returned to earth. (2)

7.2.2 For any two points on earth there is a maximum frequency that will be reflected when beamed at the ionosphere. A higher frequency than this one will penetrate the ionosphere and continue into space. (2)

**[10]**

## QUESTION 8

8.1
- Wow is the slow variation of tape speed.
- Flutter is the fast variation of tape speed. (2)

8.2 Slow recording speed results in poor frequency response.✓ However, more information can be recorded per unit length✓ of magnetic tape. Fast recording speed results in good frequency response but less information can be recorded per unit length of magnetic tape.✓ (3)

**[5]**

## QUESTION 9

1. Disconnect the oscillator and the A.G.C. circuit.✓

2. Couple the output of the RF generator via a capacitor to the input of the first IF stage.✓✓

3. Connect the Y-input of the oscilloscope via a capacitor to the output of the discriminator.✓✓

4. Connect the X-input of the oscilloscope to the X-input of the RF generator.✓✓

5. Adjust the RF generator to sweep above and below 10,7 MHz.✓✓

6. If the following curve appears on the screen it indicates that the IF response is too low.✓✓

7. Adjust the IF transformers from the second last to the first to give as square a curve as possible.✓✓

8. This curve indicates a response curve too high 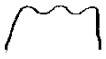 while this 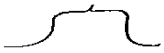 curve indicates the correct one.✓✓

**[15]**

**TOTAL: 100**

Copyright reserved