higher education & training

Department:
Higher Education and Training
REPUBLIC OF SOUTH AFRICA

T520**(E)**(A2)T

NATIONAL CERTIFICATE

ELECTRICAL TRADE THEORY N3

(11041263)

2 August 2019 (X-Paper)
09:00–12:00

This question paper consists of 7 pages and 1 formula sheet.

DEPARTMENT OF HIGHER EDUCATION AND TRAINING
REPUBLIC OF SOUTH AFRICA

NATIONAL CERTIFICATE
ELECTRICAL TRADE THEORY N3
TIME: 3 HOURS
MARKS: 100

INSTRUCTIONS AND INFORMATION

1. Answer ALL the questions.
2. Read ALL the questions carefully.
3. Number the answers according to the numbering system used in this question paper.
4. Where applicable, answers must be in accordance with the SABS (SANS) Code of Practice SANS 10142–1:2003 for the Wiring of Premises.
5. Sketches must be neat, labelled and large enough to show the required detail.
6. Answers must be given to TWO decimal places.
7. Write neatly and legibly.

Copyright reserved

QUESTION 1: DOMESTIC APPLIANCES

1.1 A stove that has been wired for three-phase supplies must be coupled to a single-phase supply.

Show, with the aid of a sketch, how the connection to the supply must be made. (2)

1.2 Draw a neat, labelled sketch of the bimetal-type thermostat of a laundry iron. (4)

1.3 Briefly explain how the temperature of the laundry iron mentioned in QUESTION 1.2, can be controlled. (2)

1.4 State TWO possible faulty conditions that could lead to the iron tripping the mains earth-leakage protection. (2)

[10]

QUESTION 2: PROTECTION

2.1 FIGURE 1 shows a magnetic-type circuit breaker. Identify the parts indicated in the sketch and write only the answer next to the question number (2.1.1–2.1.7) in the ANSWER BOOK.

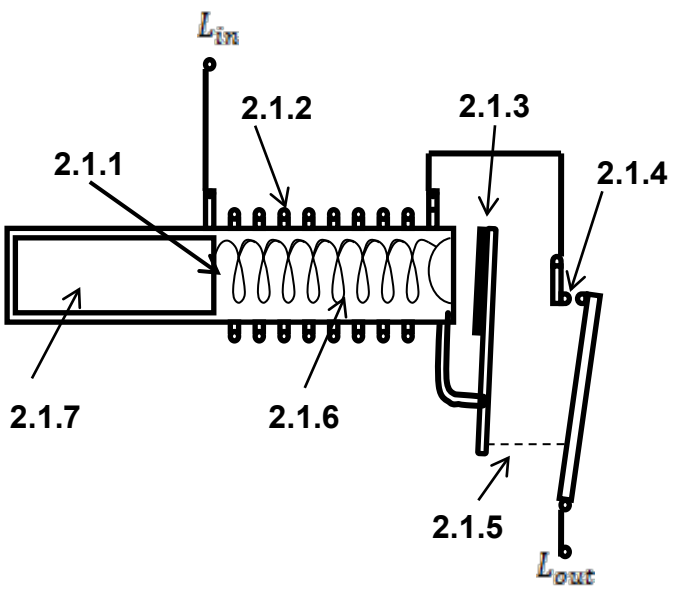

FIGURE 1 (7 × 1) (7)

2.2 Explain how the operation of the overload is achieved in the circuit breaker shown in FIGURE 1. (3)

[10]

QUESTION 3: ILLUMINATION

3.1 Explain the purpose of the choke in fluorescent-lamp circuits, operating with glow starters. (2)

3.2 Briefly explain how the safety circuit of an instant-start fluorescent lamp reduces the risk of electric shock. (2)

3.3 State TWO applications of each of the following lamps:

3.3.1 High-pressure mercury-vapour discharge lamps

3.3.2 Sodium-vapour discharge lamps

3.3.3 Cold-cathode neon lamps

(3 × 2) (6)

[10]

QUESTION 4: ALTERNATING-CURRENT THEORY

The current equation for a circuit is $i = 250 \sin 314t$.

NOTE: The angle is in radians.

Calculate the following:

4.1 The RMS value of the current (3)

4.2 The instantaneous value 8 milliseconds after reading zero while increasing positively (3)

4.3 How long it would take to build up to a value of 130 amperes, after passing through zero (3)

4.4 State the meaning of the term 'Instantaneous Value' (1)

[10]

QUESTION 5: SERIES RLC CIRCUITS

A series circuit has a resistance of 5 Ω, a capacitive reactance of 6 Ω and an inductancive reactance of 9 Ω. A current of 2A flows though the AC circuit.

5.1 Calculate the following:

5.1.1 The Impedance (3)

5.1.2 The total voltage (3)

5.1.2 Phase angle (3)

5.2 State the nature of the phase angle. (1)

[10]

Copyright reserved

QUESTION 6: THREE-PHASE AC SYSTEMS

6.1 Draw a three-phase waveform to illustrate how a rotating magnetic field in a three-phase induction motor is produced. (3)

6.2 Draw a three-phase phasor diagram of the rotating magnetic field mentioned in QUESTION 6.1. (1)

6.3 A three-phase squirrel-cage motor is connected in delta across a 380 V, three-phase supply and draws a line current of 20 A at 0,9 lagging.

Calculate the following:

6.3.1 Input power to the motor (3)

6.3.2 Phase current of the motor (3)

[10]

QUESTION 7: TRANSFORMERS

7.1 Draw a diagram to show how three single-phase transformers can be connected in star-delta for a three-phase operation. (7)

7.2 A 300 kVA transformer has its primary connected in delta to a 66 kV supply. It has a star-connected secondary line voltage of 11 kV.

Calculate the Secondary phase voltage. (3)

[10]

QUESTION 8: DC MACHINES

8.1 State the functions of the following components in a DC machine:

8.1.1 Carbon brushes

8.1.2 Field coils

8.1.3 Interpoles

(3 × 1) (3)

8.2 Make use of two neatly, labelled sketches to show how a DC long-shunt motor can be reversed. (7)

[10]

QUESTION 9: AC MACHINES

9.1 Indicate whether the following statements are TRUE or FALSE. Choose the answer and write only 'True' or 'False' next to the question number (9.1.1–9.1.5) in the ANSWER BOOK.

9.1.1 The starting current of a squirrel-cage motor is high compared to a wound-rotor motor.

9.1.2 A universal motor operates only on AC.

9.1.3 A resistance-start induction-run motor can only be used for driving fans.

9.1.4 Shaded-pole motors are self-starting, cheap and robust.

9.1.5 Single-phase motors require special starting equipment.

(5 × 1) (5)

9.2 Study the diagram of a starter circuit shown in FIGURE 2 and answer the questions.

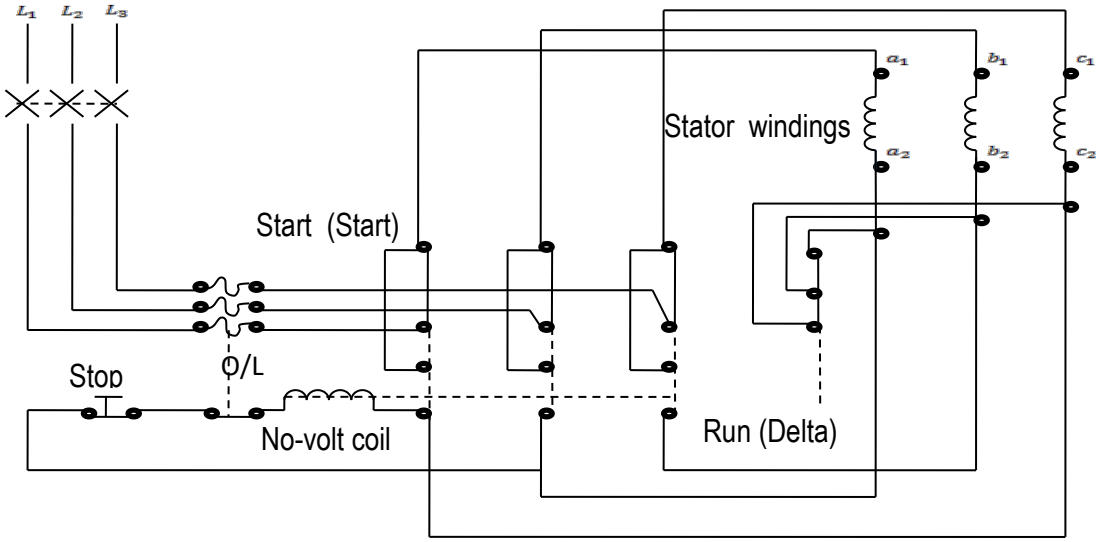

FIGURE 2

9.2.1 For which type of motor would the starter circuit shown in FIGURE 2 be suitable? (1)

9.2.2 State the reason for using the starter in QUESTION 9.2.1 (2)

9.2.3 State the purpose of the no-volt coil shown in FIGURE 2 (2)

[10]

QUESTION 10: MEASURING INSTRUMENTS AND ELECTRONICS

10.1 Study FIGURE 3 and answer the questions below:

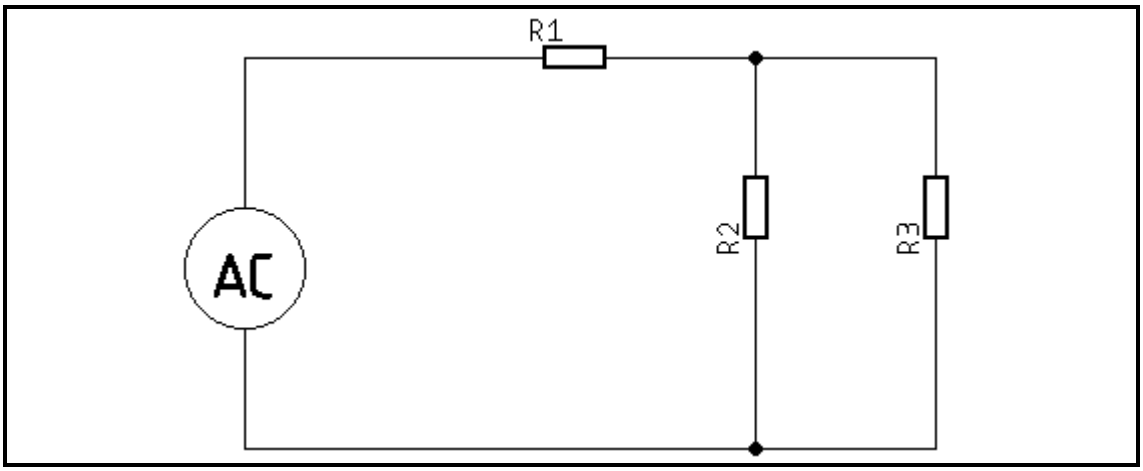

FIGURE 3

Redraw the circuit diagram shown in FIGURE 3 and add measuring instruments that can measure the following:

10.1.1 Frequency across the supply

10.1.2 The voltage across R2

10.1.3 The current through R3

(3 × 2) (6)

10.2 Study the symbol of a transistor shown in FIGURE 4. Name the parts indicated on the sketch and write only the answer next to the question number (10.2.1–10.2.3) in the ANSWER BOOK.

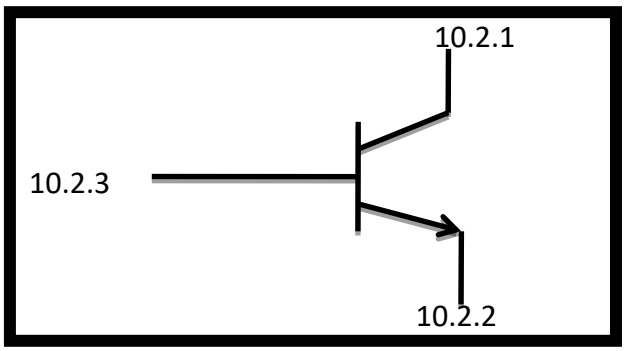

FIGURE 4 (3)

10.3 Identify the type of transistor represented by FIGURE 4. (1)

[10]

TOTAL: 100

Copyright reserved

ELECTRICAL TRADE THEORY N3

FORMULA SHEET

$I_T = \frac{V}{Z}$

$I_{ACTIVE} = I_T \cos \emptyset$

$I_{REACTIVE} = I_T \sin \emptyset$

$X_L = 2\pi f L$

$X_C = \frac{1}{2\pi f C}$

$Z = \sqrt{R^2 + (X_L - X_C)^2}$

$\emptyset = \cos^{-1}(\frac{R}{Z})$

$V_R = I_T R$

$V_{XL} = I_T X_L$

$V_{XC} = I_T X_C$

$V = \sqrt{V_R{}^2 + (V_{XL} - V_{XC})^2}$

$P = I^2 R$

$P = \sqrt{3}\, V_L I_L \cos$

$S = VI$

$S = \sqrt{3}\, V_L I_L$

DELTA

$V_L = V_{PH/F}$

$I_L = \sqrt{3} I_{PH/F}$

STAR

$V_L = \sqrt{3} V_{PH/F}$

$I_L = I_{PH/F}$

$\frac{V_P}{V_S} = \frac{N_P}{N_S} = \frac{I_S}{I_P}$

$N = \frac{f.60}{p}$

$s = \frac{n - n_r}{n}$

$w = 2\pi f$

The next five formulae are also true for voltage

$i = I_m \sin$

$I_{ms} = 0{,}707\, I_m$

$I_{ave} = 0{,}637\, I_m$

$I_{rms} = \sqrt{\frac{i1^2 + i2^2 + \cdots in^2}{n}}$

$I_{ave} = \frac{i_1 + i_2 + \ldots i_n}{n}$

Form factor = $\frac{RMS-Value}{AVE-Value}$

Crest factor = $\frac{MAX-Value}{RMS-Value}$

SERIES

$R_T = R_1 + R_2 + \cdots R_n$

PARALLEL

$\frac{1}{R_T} = \frac{1}{R_1} + \frac{1}{R_2} + \cdots \frac{1}{R_n}$

Copyright reserved