higher education & training

Department:
Higher Education and Training
REPUBLIC OF SOUTH AFRICA

MARKING GUIDELINE

NATIONAL CERTIFICATE

ELECTRICAL TRADE THEORY N3

2 AUGUST 2019

This marking guideline consists of 8 pages.

Copyright reserved

QUESTION 1: DOMESTIC APPLIANCES

1.1

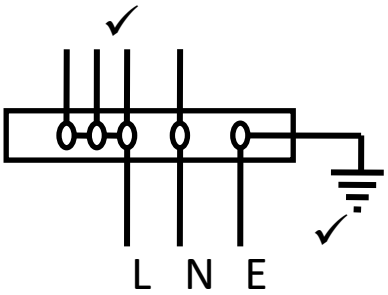

(2)

1.2

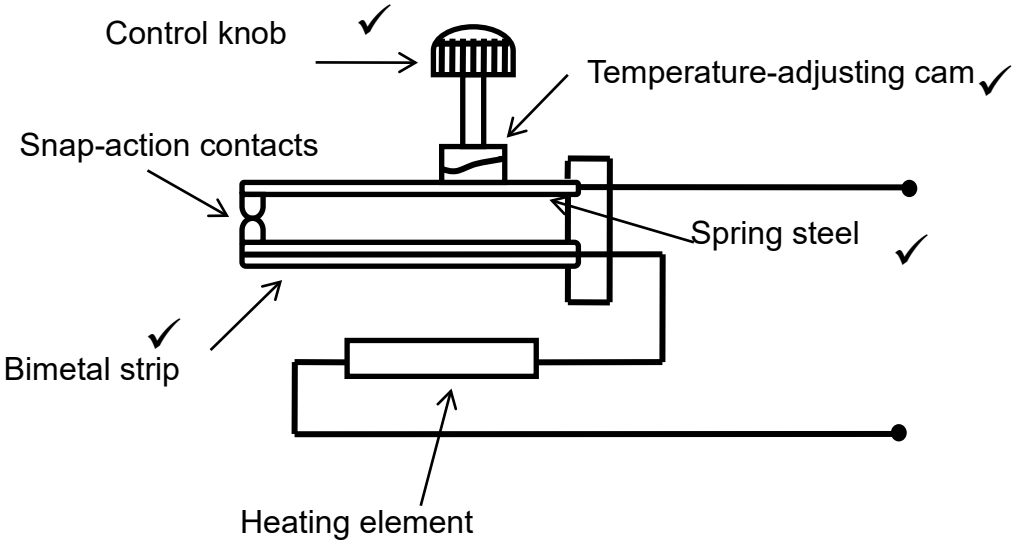

(Any 4 × 1) (4)

1.3 Heat causes the bimetal strip to bend✓. The temperature-adjusting cam increases the distance and the bimetal strip flexes, opening the contacts.✓ (2)

1.4 There could be:

- An insulation fault in the flexible cord from the plug to the iron
- An insulation fault between the element and the casing of the iron
- An internal insulation fault between earth and the current-carrying parts in the switching circuit of the iron (Any 2 × 1) (2)

[10]

Copyright reserved

QUESTION 2: PROTECTION

2.1 2.1.1 Oil-filled cylinder
2.1.2 Solenoid (coil)
2.1.3 Iron armature
2.1.4 Trip switch
2.1.5 Movement operates tripping mechanism
2.1.6 Spring
2.1.7 Iron piston

(7 × 1) (7)

2.2 The piston is attracted into the coil centre because of the magnetic field setup by the current overload.✓ Now the armature is attracted and the mechanical link opens the contacts.✓ This opens the circuit and the current flow stops.✓ (3)

[10]

QUESTION 3: ILLUMINATION

3.1
- It provides the voltage surge for starting.
- It limits the current to the operating value of the lamps. (2)

3.2
- It reduces the electrical shock hazard.
- The fixed base pin acts as a switch breaking the circuit to the ballast when the lamp is removed. (2)

3.3 3.3.1
- Street lighting
- Flood lighting
- Lighting of industrial premises (Any 2 × 1) (2)

3.3.2
- Streetlighting
- Security Lighting
- Highways / Airport runways

(Any 2 × 1) (2)

3.3.3
- Electrical appliances, such as stoves, fridges and heaters
- Control panels where space is limited (2)

[10]

QUESTION 4: ALTERNATING-CURRENT THEORY

4.1 $I_{rms} = 0{,}707 \times I_M$ ✓
$= 0{,}707 \times 250$ ✓
$= 176{,}75A$ ✓ (3)

4.2 $i = 250 \sin 314t$ ✓
$= 250 \sin(314 \times 8 \times 10^{-3} \times 57{,}3°)$
$= 250 \times 0{,}588$ ✓
$= 147{,}2A$ ✓ (3)

4.3 $i = 250 \sin 314t$
$130 = 250 \sin(314t \times 57{,}3°)$
$\sin(314t \times 57{,}3) = \frac{130}{250}$ ✓
$t = \frac{\sin^{-1} 0{,}52}{314 \times 57{,}3}$ ✓
$= 1{,}74\ milliseconds$ ✓ OR t = 0,00174 sec (3)

4.4 The value of the sine wave at a specific moment.✓ (1)
[10]

QUESTION 5: SERIES RLC CIRCUITS

5.1 5.1.1 $Z_T = \sqrt{R^2 + (x_L - x_C)^2}$ ✓
$= \sqrt{5^2 + (9-6)^2}$ ✓
$= \sqrt{25 + 9}$
$= \sqrt{34}$
$= 5{,}83\Omega$ ✓ (3)

5.1.2 $V_T = Z_T \times I_T$ ✓
= 5,83 x 2 ✓
= 11,66 V ✓ (3)

5.1.2 $\tan Ø = \frac{x_L - x_C}{R}$
$= \tan^{-1} \frac{9-6}{5}$ ✓
$= \tan^{-1} \frac{3}{5}$ ✓
$Ø = 30{,}96°$ ✓ (3)

5.2 Lagging as x_L is greater than x_C✓ (1)
[10]

QUESTION 6: THREE-PHASE AC SYSTEMS

6.1

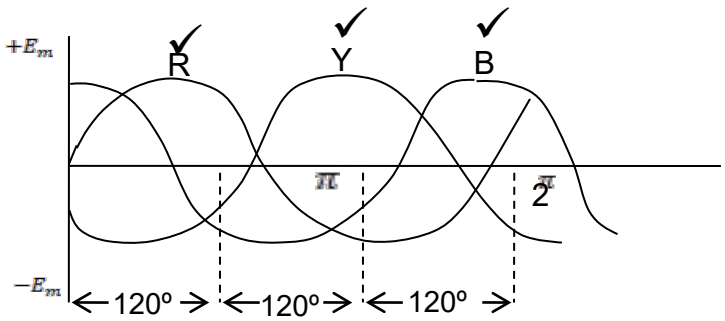

WAVEFORM (3)

6.2

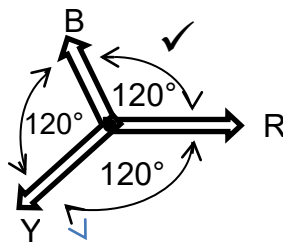

(1)

6.3 6.3.1

$P = \sqrt{3}V_L I_L \cos\emptyset$ ✓
$= \sqrt{3} \times 380 \times 20 \times 0{,}9$ ✓
$= 11847.23W$ ✓
= 11,85 kW

OR

P = 3 × Vph × Iph x cos Ø
= 3 × 380 × 11,55 × 0,9
= 11 850,3 W
= 11,85 kW (3)

6.3.2

$I_{ph} = \frac{I_L}{\sqrt{3}}$ ✓
$= \frac{20}{\sqrt{3}}$ ✓
$= 11{,}55A$ ✓

(3)
[10]

QUESTION 7: TRANSFORMERS

7.1

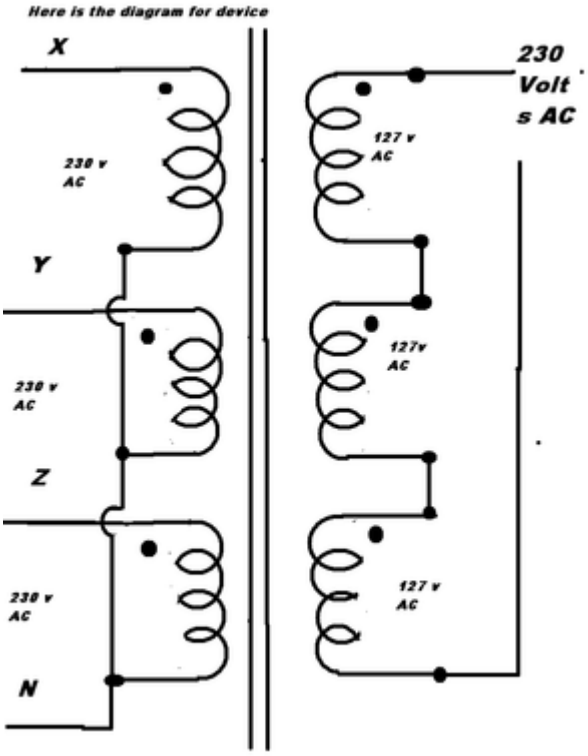

Note: 4 Marks Star Primary
3 Marks Delta Secondary (7)

7.2 $V_{L2} = \sqrt{3}V_{ph2}$✓

$V_{ph2} = \frac{V_{L2}}{\sqrt{3}}$

$= \frac{11000}{\sqrt{3}}$ ✓

= 6359,85V✓ (3)

[10]

QUESTION 8: DC MACHINES

8.1 8.1.1 It provides continuity for the electric current to reach the armature windings. (1)

8.1.2 It produces a magnetic field that reacts with the armatures magnetic field. (1)

8.1.3 It helps to reduce armature reaction without the need of brush shifting. (1)

8.2

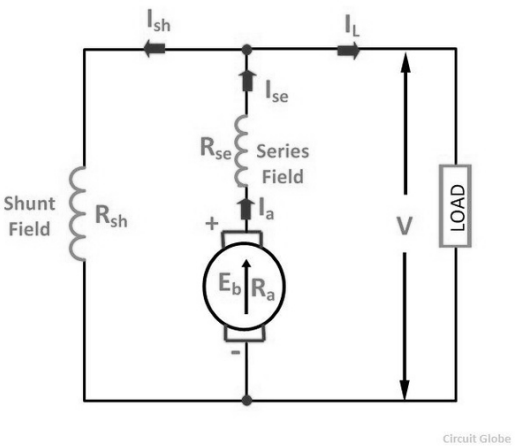

Note:
4 Marks for original Drawing
3 Marks for drawing showing reverse

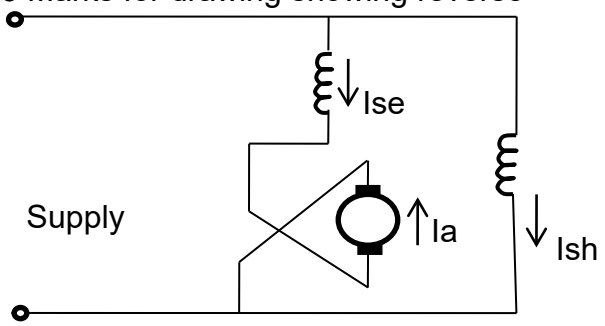

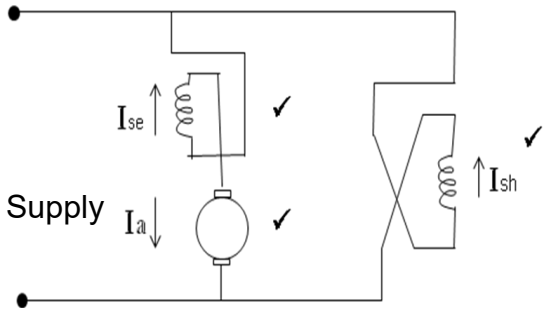

REVERSE ARMATURE OR **FIELD WINDING**

(7)
[10]

QUESTION 9: AC MACHINES

9.1 9.1.1 True
9.1.2 False
9.1.3 False
9.1.4 True
9.1.5 False

(5 × 1) (5)

9.2 9.2.1 Three-phase induction motor (1)

9.2.2 The motor draws less current✓ when the stator windings are connected in star which has a lower supply voltage.✓ (2)

9.2.3 It should open circuit✓ if the voltage falls either to zero or below the holding voltage✓ (2)
[10]

QUESTION 10: MEASURING INSTRUMENTS AND ELECTRONICS

10.1

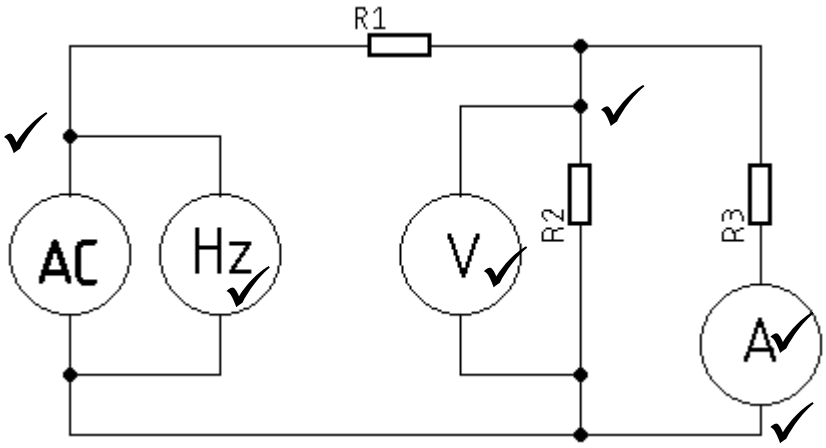

Note:
1 Mark per Instrument – Correct Label
1 Mark Per Instrument – Correct connection (6)

10.2 10.2.1 Collector
10.2.2 Emitter
10.2.3 Base

(3 × 1) (3)

10.3 Common emitter (1)

[10]

TOTAL: 100

Copyright reserved