higher education & training

Department:
Higher Education and Training
REPUBLIC OF SOUTH AFRICA

MARKING GUIDELINE

NATIONAL CERTIFICATE

BUILDING DRAWING N3

19 November 2020

This marking guideline consists of 18 pages.

Copyright reserved

NOTE: Do not allocate marks for any part of the drawing in the incorrect position other than the marks allocated for the hatching of that component.

Allocate marks for neatness, correct title and scale even if the drawing is completely incorrect.

QUESTION 1

1.1 True
1.2 False
1.3 False
1.4 True
1.5 True

(5 × 2) **[10]**

QUESTION 2: BRICKWORK

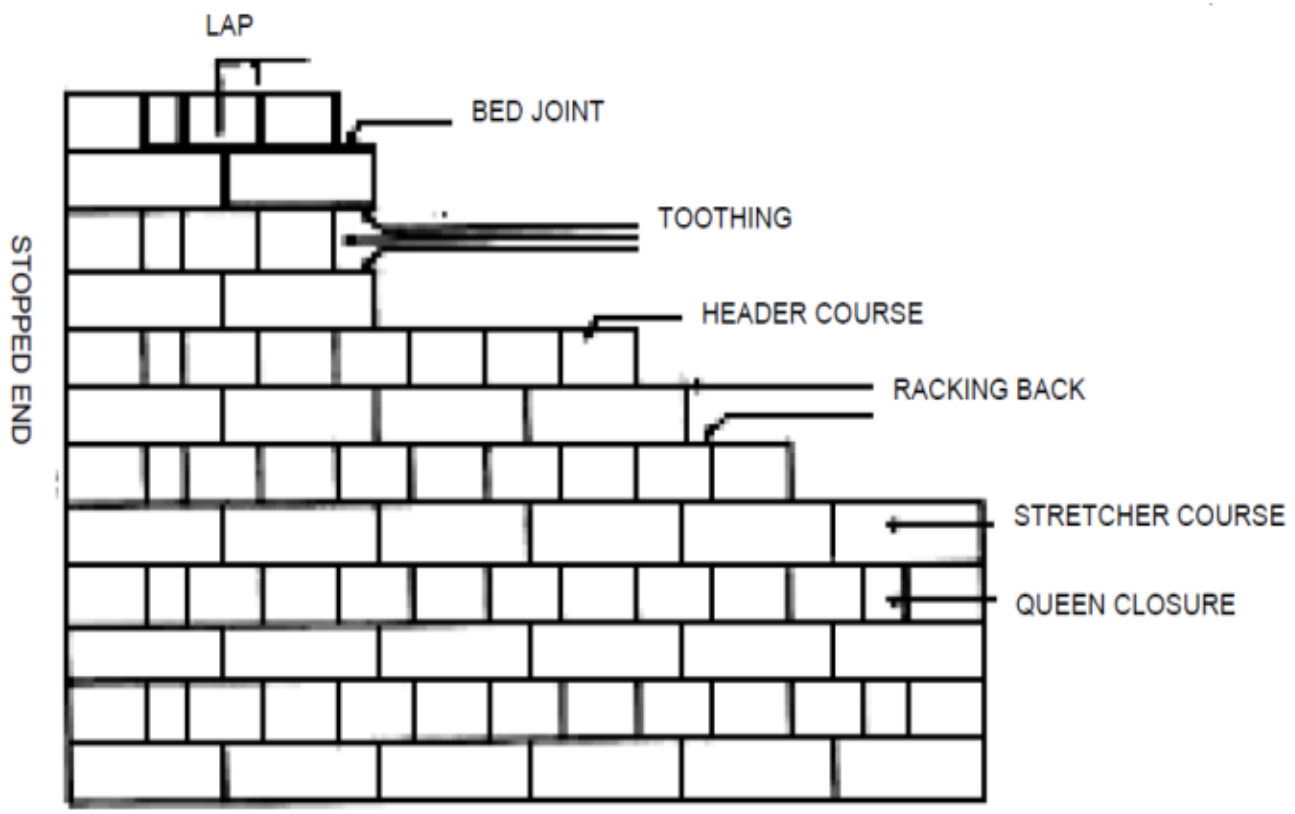

FRONT ELEVATION OF ENGLISH BOND
SCALE 1:10

QUESTION 2: RUBRIC			
PART OF DRAWING	**MARKING CRITERIA**	**POSSIBLE MARK**	**REMARKS**
Stopped end, lap joint, bed joint, toothing racking back, stretcher course, header course, queen closure twelve courses high	Correct position	9	
	Dimensioning	2	
	Labelling	9	
Bricks	Correct bond	4	
	Subtotal	**24**	
	Divided by	**2**	
		Overall correctness	**12**
		Scale	**1**
		Title	**1**
		Balanced layout and neatness	**1**
		TOTAL:	**15**

SUMMARY QUESTION 2

Marking criteria	Possible mark	Marker	Internal moderator	External moderator
Correct position	6			
Labels	2			
Dimensions	14			
Bond	4			
Subtotal	**26**			
Divided by	**2,89**			
Overall correctness	**9**			
Line work	**4**			
Accuracy	**1**			
Balanced layout and neatness	**1**			
TOTAL:	**15**			

[15]

QUESTION 3: GROUND FLOOR CONSTRUCTION

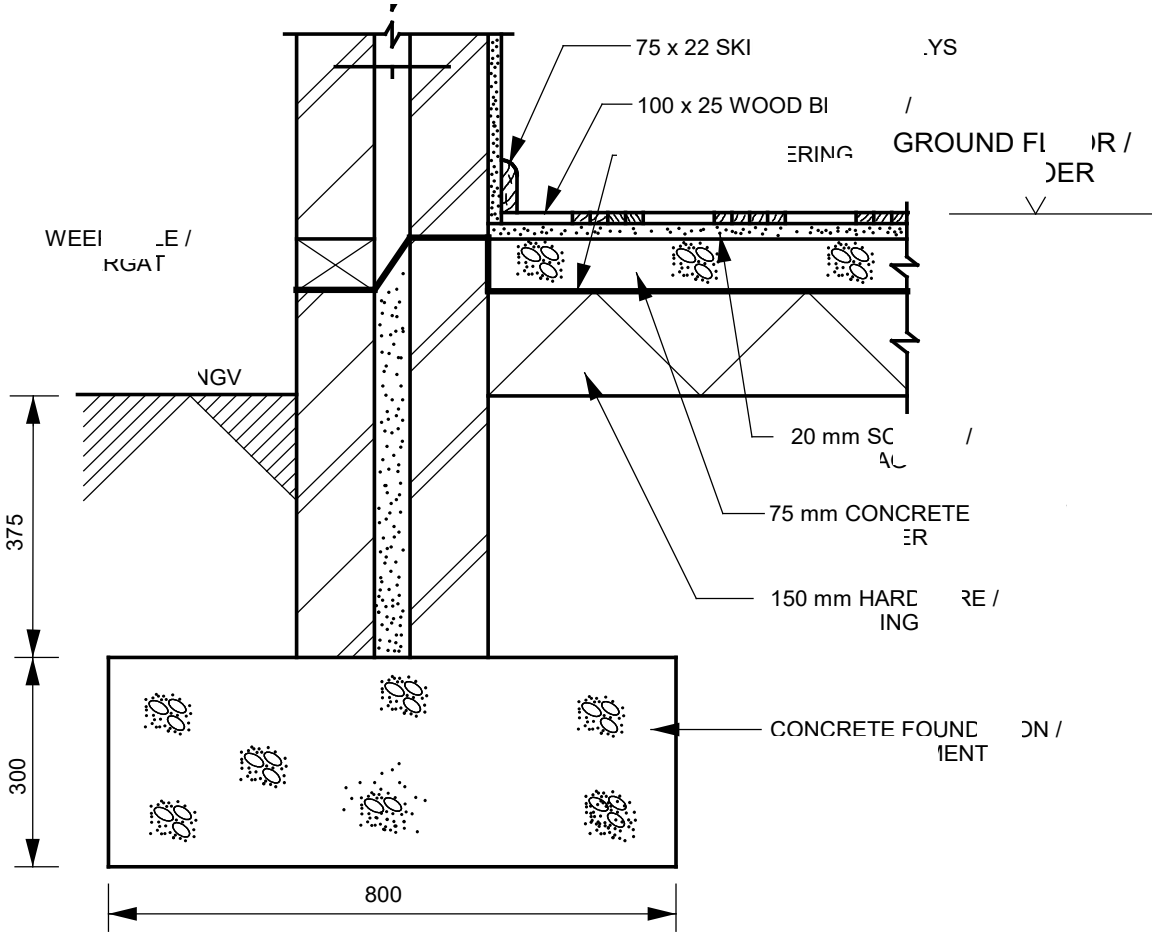

VERTICAL SECTION THROUGH THE GROUND AND FOUNDATION
SCALE 1:10

QUESTION 3: RUBRIC			
PART OF DRAWING	**MARKING CRITERIA**	**POSSIBLE MARK**	**REMARKS**
Foundation, hard core, concrete floor	Correct position	3	
	Dimensioning	3	
	Labelling	3	
	Hatching	3	
Ground floor screed, floor finish, skirting	Correct position	3	
	Dimensioning	3	
	Labelling	3	
	Hatching	3	
Wall, tie wires, plaster	Correct position	3	
	Dimensioning	2	wall and plaster
	Labelling	3	
	Hatching	2	wall and plaster
DPC, weeping hole, ground level	Correct position	3	
	Dimensioning	1	regulation
	Labelling	3	
	Hatching	1	ground level
		Subtotal	**42**	
		Divided by	**3,5**	
		Overall correctness	**12**	
		Overall impression	**1**	
		Title	**1**	
		Scale	**1**	
		TOTAL:	**15**	

Copyright reserved

SUMMARY QUESTION 3

Marking criteria	Possible mark	Marker	Internal moderator	External moderator
Correct position	12			
Dimensions	9			
Labels	12			
Hatching	9			
Subtotal	**42**			
Divided by	**3,5**			
Overall correctness	**12**			
Overall impression	**1**			
Title	**1**			
Scale	**1**			
TOTAL:	**15**			

[15]

QUESTION 4: CONCRETE SLAB WITH SUSPENDED CEILING

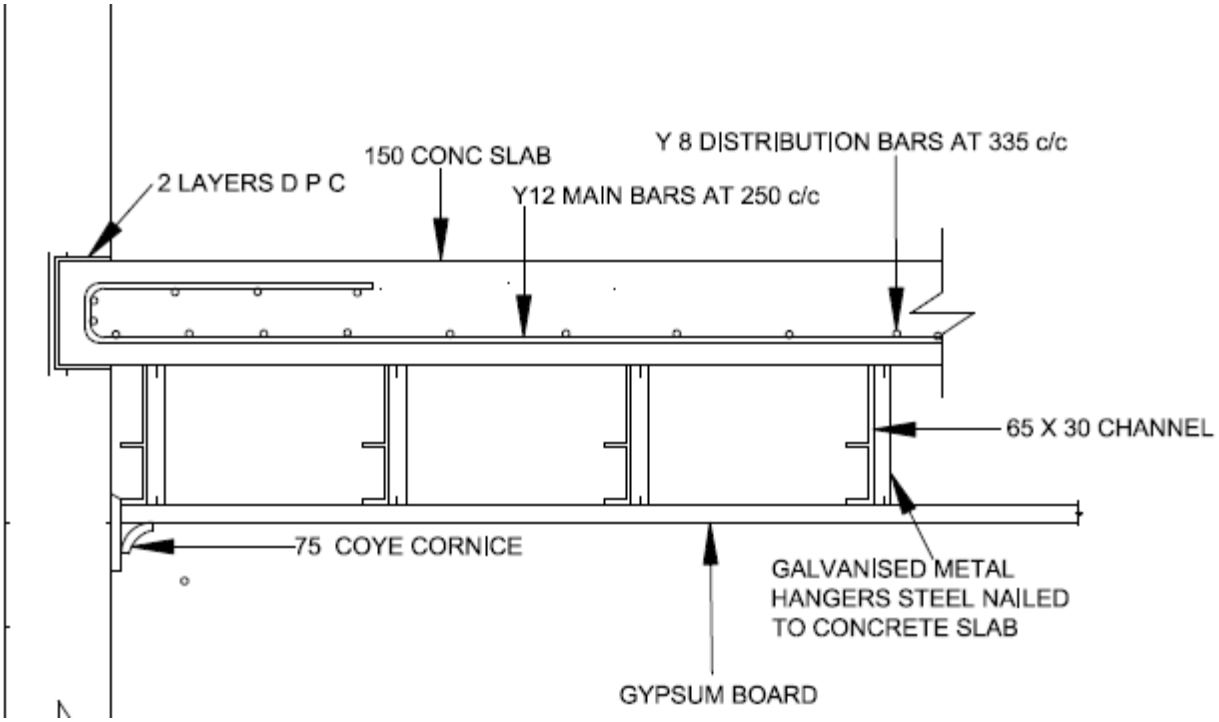

QUESTION 4: RUBRIC			
PART OF DRAWING	**MARKING CRITERIA**	**POSSIBLE MARK**	**REMARKS**
Ceiling board, cornice, channel, hangers,	Correct position	4	
	Dimensioning	4	
	Labelling	4	
	Hatching	4	
Concrete slab, screed, floor finish, skirting	Correct position	4	
	Dimensioning	4	
	Labelling	4	
	Hatching	4	
Wall, tie wires, plaster	Correct position	2	
	Dimensioning	2	wall and plaster
	Labelling	3	
	Hatching	2	wall and plaster
DPC, brick force	Correct position	3	
	Dimensioning	1	regulation
	Labelling	3	
	Hatching	2	ground level
	Subtotal	**50**	
	Divided by	**3,125**	
	Overall correctness	**16**	
	Overall impression	**2**	
	Title	**1**	
	Scale	**1**	
	TOTAL:	**20**	

Copyright reserved

SUMMARY QUESTION 4

Marking criteria	Possible mark	Marker	Internal moderator	External moderator
Correct position	13			
Dimensions	11			
Labels	14			
Hatching	12			
Subtotal	**50**			
Divided by	**3,125**			
Overall correctness	**16**			
Overall impression	**2**			
Title	**1**			
Scale	**1**			
TOTAL:	**20**			

[20]

QUESTION 5: CASEMENT WINDOW FRAME HEAD

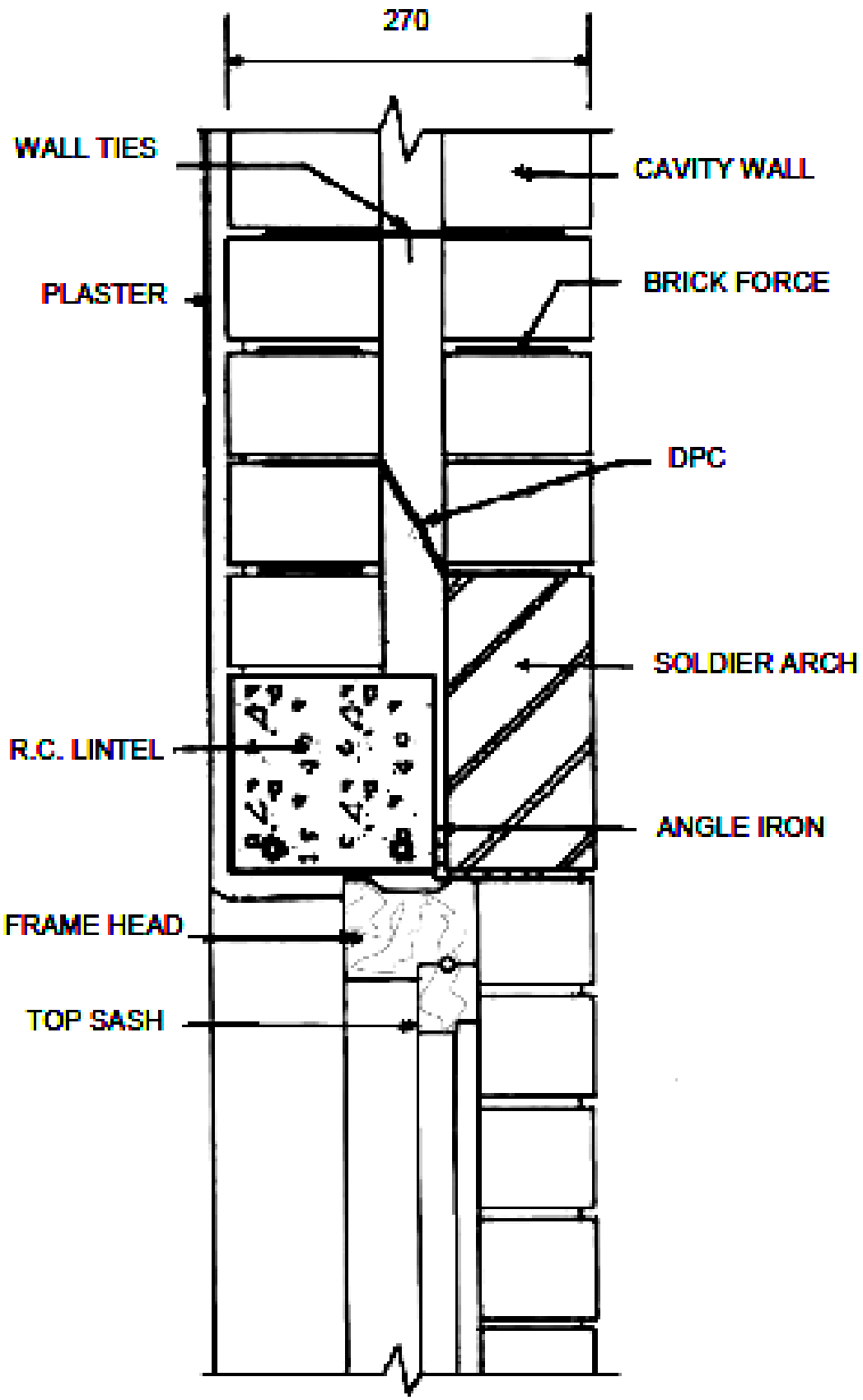

QUESTION 5: RUBRIC			
PART OF DRAWING	**MARKING CRITERIA**	**POSSIBLE MARK**	**REMARKS**
Wall and plaster	Correct position	3	
	Dimensioning	3	
	Labelling	3	
	Hatching	3	Both skins
Concrete lintel and soldier arch	Correct position	4	
	Dimensioning	2	
	Labelling	2	
	Hatching	2	
DPC and tie wires	Correct position	4	
	Dimensioning	2	
	Labelling	2	
	Hatching		
Head of frame and top rail	Correct position	4	
	Dimensioning	2	
	Labelling	2	
	Hatching	2	
Glass	Correct position	1	
	Dimensioning	1	
	Labelling	1	
	Hatching	1	
	Subtotal	**44**	
	Divided by	**4,4**	
	Overall correctness	**10**	
	Line work	**3**	
	Accuracy	**4**	
	Balanced layout and neatness	**3**	
	TOTAL:	**20**	

Copyright reserved

SUMMARY QUESTION 5

Marking criteria	**Possible mark**	**Marker**	**Internal moderator**	**External moderator**
Correct position	16			
Dimensions	10			
Labels	10			
Hatching	8			
Subtotal	**44**			
Divided by	**4,4**			
Overall correctness	**10**			
Line work	**3**			
Accuracy	**4**			
Balanced layout and neatness	**3**			
TOTAL:	**20**			

[20]

QUESTION 6: SKELETON JAMB LINING

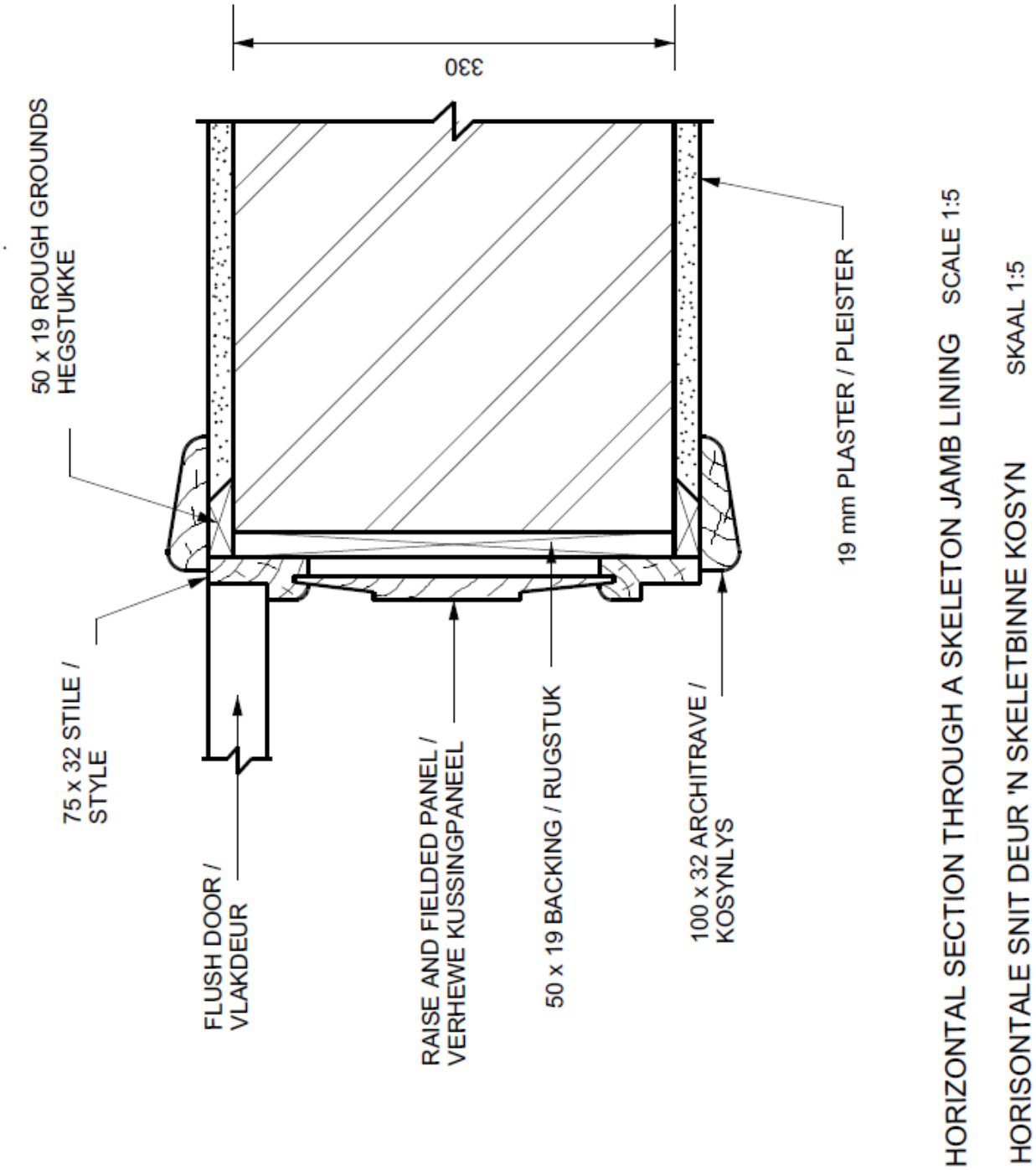

QUESTION 6: RUBRIC			
PART OF DRAWING	**MARKING CRITERIA**	**POSSIBLE MARK**	**REMARKS**
Wall and plaster	Correct position	4	
	Dimensioning	2	
	Labelling	2	
	Hatching	2	
Backing and rough grounds	Correct Position	4	
	Dimensioning	2	
	Labelling	2	
	Hatching	2	
Stile and door	Correct Position	4	
	Dimensioning	2	
	Labelling	2	
	Hatching	1	Stile
Raised and fielded panel	Correct Position	4	
	Dimensioning	2	
	Labelling	1	
	Hatching	1	
Architrave	Correct position	4	
	Dimensioning	2	
	Labelling	1	
	Hatching	1	
	Subtotal	**45**	
	Divided by	**9**	
	Overall correctness	**5**	
	Line work	**1**	
	Accuracy	**3**	
	Balanced layout and neatness	**1**	
	TOTAL:	**10**	

Copyright reserved

SUMMARY QUESTION 6

Marking criteria	Possible mark	Marker	Internal moderator	External moderator
Correct position	20			
Dimensions	10			
Labels	8			
Hatching	7			
Subtotal	**45**			
Divided by	**9**			
Overall correctness	**5**			
Line work	**1**			
Accuracy	**3**			
Balanced layout and neatness	**1**			
TOTAL:	**10**			

[10]

QUESTION 7: PLUMBING

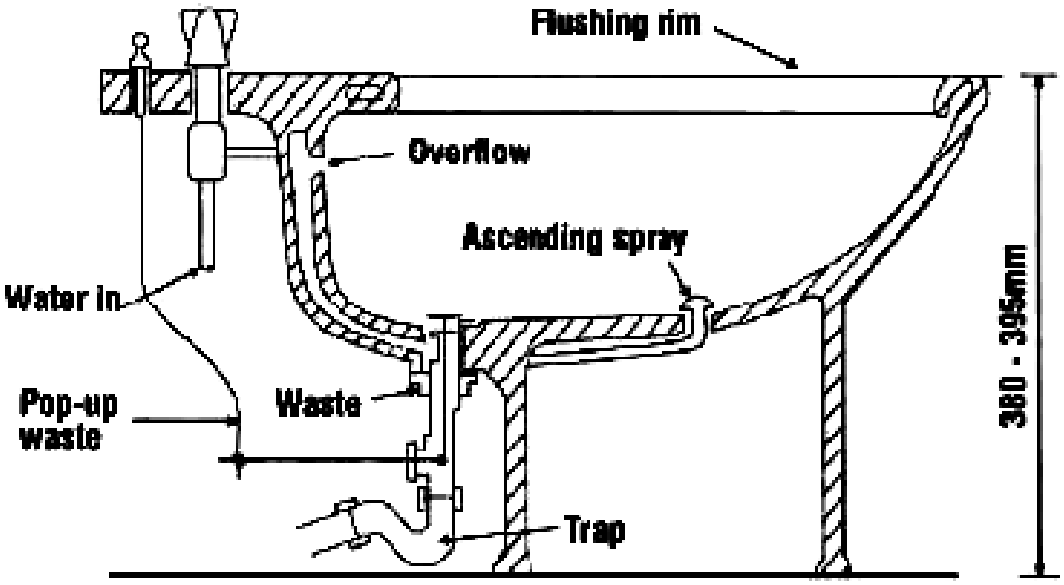

QUESTION 7: RUBRIC			
PART OF DRAWING	**MARKING CRITERIA**	**POSSIBLE MARK**	**REMARKS**
Flushing rim, overflow, ascending spray, water inlet, pop-up waste and waste	Correct position	6	
	Dimensioning	1	
	Labelling	6	
	Hatching	1	
	Subtotal	**14**	
	Divide by	**7**	
	Overall correctness	**7**	
	Title	**1**	
	Balanced layout and neatness	**2**	
	TOTAL:	**10**	

SUMMARY QUESTION 7

Marking criteria	Possible mark	Marker	Internal moderator	External moderator
Correct position	6			
Dimensioning	1			
Labelling	6			
Hatching	1			
Subtotal	**14**			
Divide by	**7**			
Overall correctness	**7**			
Title	**1**			
Balanced layout and neatness	**2**			
TOTAL:	**10**			

[10]

TOTAL: 100

Copyright reserved